# Status of Implementation of the STEP Short-term Upgrades

Progress Report to STEP

September 21, 2006

Bob Smith – Sub-group Chair

# Short Term STEP Upgrades

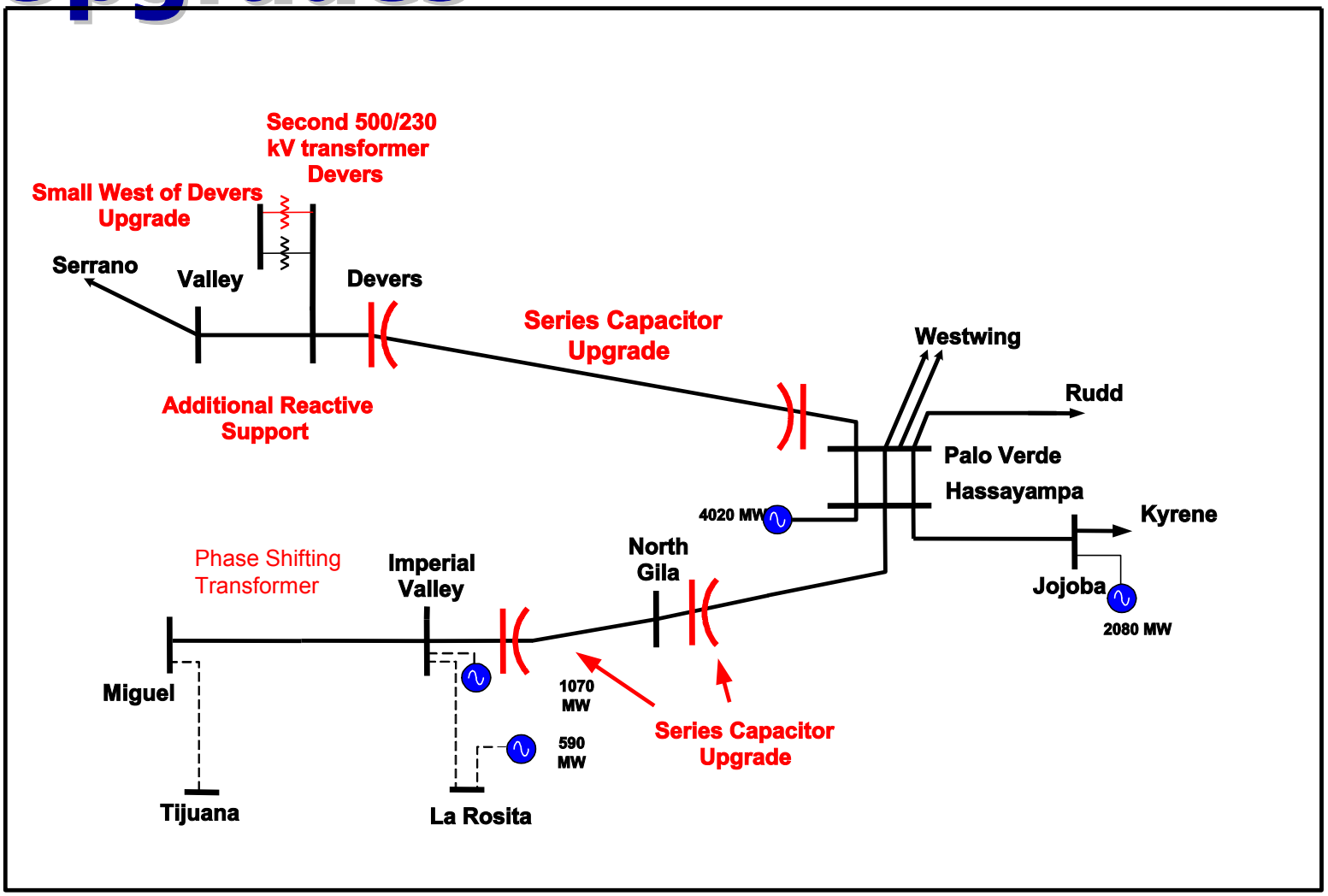

# Rating Increase Implementation

- Capacity increase of 505MW implemented July 19, 2006
- Path 49 total capacity 8055MW
- Operating procedure until phase shifter in service
- Request from WECC OTCPG for season rating increase until SVC in service approved

# Hassayampa-North Gila Line

- North Gila series capacitor bank
  - Replacement complete
  - Budget $5.25M
  - Total cost approximately $4M

# Hassayampa-North Gila Line

- Sag mitigation
  - All excavation work completed
  - Only work left is insertion of tower
    - Scheduled for November 2006
    - Expect 3-day outage of line required
  - Budget $2.6M
  - Total cost anticipated to be <$2M