BEFORE THE PUBLIC UTILITIES COMMISSION
OF THE STATE OF CALIFORNIA

Order Instituting Rulemaking to Oversee the Resource Adequacy Program, Consider Program Reforms and Refinements, and Establish Forward Resource Adequacy Procurement Obligations.	Rulemaking 25-10-003

CALIFORNIA INDEPENDENT SYSTEM OPERATOR CORPORATION FINAL 2027 LOCAL CAPACITY TECHNICAL REPORT AND UPDATE REGARDING 2027 FLEXIBLE CAPACITY NEEDS ASSESSMENT

Roger E. Collanton
General Counsel
William H. Weaver
Assistant General Counsel
Marissa Mercado
Counsel
California Independent System
Operator Corporation
250 Outcropping Way
Folsom, CA 95630
Tel: 916-963-0521
Fax: 916-608-7222
Email: mmercado@caiso.com

Dated: May 1, 2026

Table of Contents

I. Introduction 1

II. Discussion 1

ATTACHMENT A 3

ATTACHMENT B 4

ATTACHMENT C 5

BEFORE THE PUBLIC UTILITIES COMMISSION
OF THE STATE OF CALIFORNIA

Order Instituting Rulemaking to Oversee the Resource Adequacy Program, Consider Program Reforms and Refinements, and Establish Forward Resource Adequacy Procurement Obligations.	Rulemaking 25-10-003

CALIFORNIA INDEPENDENT SYSTEM OPERATOR CORPORATION
FINAL 2027 LOCAL CAPACITY TECHNICAL REPORT AND UPDATE REGARDING 2027 FLEXIBLE CAPACITY NEEDS ASSESSMENT

I. Introduction

Pursuant to the December 12, 2025 *Assigned Commissioner's Scoping Memo and Ruling* (Scoping Memo) and the April 3, 2026 *Administrative Law Judge's Ruling Modifying Track 1 Schedule For Local Capacity Requirement Issues* (Modified Schedule), the California Independent System Operator Corporation (CAISO) hereby provides its Final 2027 Local Capacity Technical Report. The CAISO also provides an update regarding the timing of its final 2027 Flexible Capacity Needs Assessment.

II. Discussion

The CAISO provides the Final 2027 Local Capacity Technical Report as Attachment A to this filing and the List of Physical Resources Accounted for in the 2027 and 2031 Local Capacity Technical Report as Attachment B. In addition, the CAISO provides the Notice of Availability as Attachment C.

As part of its annual Local Capacity Technical Study process, the CAISO provides an opportunity for stakeholders to comment on its draft Local Capacity Requirements (LCR) results prior to publishing the Final Local Capacity Technical Study. The CAISO responds to each stakeholder comment through its LCR process. The CAISO did not receive any comments on the draft LCR results. The California Public Utilities Commission (Commission) also provided parties an opportunity to file comments on the draft LCR results in this proceeding. Parties submitted one set of comments that did not suggest any revisions to the draft LCR results.[1]

[1] *See* Sierra Club and California Environmental Justice Alliance Comments on the CAISO's Draft 2027 Local Capacity Technical Report.

The CAISO also provides an update on its 2027 Flexible Capacity Needs Assessment and 2027 Availability Assessment Hours. The Scoping Memo and Modified Schedule request the CAISO file final 2027 flexible resource adequacy requirements in this proceeding in early May. The CAISO published its draft 2027 Flexible Capacity Needs Assessment on March 31, 2026 and held a stakeholder meeting on April 2, 2026.[2] The CAISO received no stakeholder comments on the draft report and draft assessment hours, which were due on April 16, 2026. The CAISO plans to finalize the 2027 Flexible Capacity Needs Assessment as soon as practicable. The CAISO is targeting a filing date of May 15, 2026.

Respectfully submitted,

By: *<u>/s/ Marissa Mercado</u>*
Roger E. Collanton
General Counsel
William H. Weaver
Assistant General Counsel
Marissa Mercado
Counsel
California Independent System
Operator Corporation
250 Outcropping Way
Folsom, CA 95630
Tel: 916-963-0521
Fax: 916-608-7222
Email: mmercado@caiso.com

Dated: May 1, 2026

[2] *See* CAISO Flexible Capacity Needs Assessment – 2027 stakeholder page: https://stakeholdercenter.caiso.com/RecurringStakeholderProcesses/Flexible-capacity-needs-assessment-2027

ATTACHMENT A

Final 2027 Local Capacity Technical Study Report

2027 LOCAL CAPACITY TECHNICAL STUDY

FINAL REPORT

AND STUDY RESULTS

Intentionally left blank

Executive Summary

This Report documents the results and recommendations of the 2027 Local Capacity Technical (LCT) Study. The LCT Study assumptions, processes, and criteria were discussed and recommended through the 2027 Local Capacity Technical Study Criteria, Methodology and Assumptions Stakeholder Meeting held on November 3, 2025. On balance, the assumptions, and processes used for the 2027 LCT Study mirror those used in the 2007-2026 LCT Studies.

Overall, the capacity needed for LCR has increased by about 602 MW or about 2.6% from 2026 to 2027.

The LCR needs have decreased in the following areas: Fresno due to load forecast decrease,Big Creek/Ventura due to load forecast decrease and change in limiting contingency, North Coast/North Bay due to higher generation requirements in the Bay Area, Stockton and Kern due to new transmission projects, San Diego/Imperial Valley due to load forecast decrease, as well as having higher dispatch of local resources in the Western LA Basin to meet its LCR need.

The LCR needs have increased in the following areas: Humboldt and Bay Area due to load forecast increase, Sierra load forecast increase and due to flow-through nature of the area, LA Basin due to load forecast increase and re-rating of bulk transmission facilities.

The 2027 LCT study results are provided to the CPUC for consideration in its 2027 resource adequacy requirements program. These results will also be used by the CAISO as "Local Capacity Requirements" or "LCR" (minimum quantity of local capacity necessary to meet the LCR criteria) and for assisting in the allocation of costs of any CAISO procurement of capacity needed to achieve the Reliability Standards notwithstanding the resource adequacy procurement of Load Serving Entities (LSEs).[1]

The load forecast used in this study is based on the final adopted California Energy Demand 2025-2045 Forecast developed by the CEC; namely the CED 2025 Local Reliability LSE and BAA Tables originally posted on Feb. 3, 2026.

To aide procurement, this LCT study provides load profiles and transmission capacity information that shows the effectiveness of local resources in meeting temporal local reliability needs.

[1] For information regarding the conditions under which the CAISO may engage in procurement of local capacity and the allocation of the costs of such procurement, please see Sections 41 and 43 of the current CAISO Tariff, at: http://www.caiso.com/238a/238acd24167f0.html.

The studied results for 2027 are provided below and 2031 LCR needs are provided for comparison:

2027 Local Capacity Needs

	August Qualifying Capacity				Capacity Available at Peak	2027 LCR Need
Local Area Name	**QF/ Muni (MW)**	**Non-Solar (MW)**	**Solar (MW)**	**Total (MW)**	**Total (MW)**	**Capacity Needed**
Humboldt	0	176	0	**176**	**176**	**149**
North Coast/ North Bay	136	946	0	**1082**	**1082**	**592**
Sierra	1237	687	0	**1924**	**1924**	**1892***
Stockton	132	634	13	**779**	**766**	**732***
Greater Bay	572	7933	8	**8513**	**8513**	**8315***
Greater Fresno	206	3430	550	**4186**	**3636**	**2090***
Kern	10	376	67	**453**	**386**	**315**
Big Creek/ Ventura	410	4640	378	**5428**	**5428**	**704**
LA Basin	1209	10617	18	**11844**	**11844**	**6823**
San Diego/ Imperial Valley	2	5954	243	**6199**	**6199**	**2006**
Total	3914	35393	1277	**40584**	**39954**	**23618**

2031 Local Capacity Needs

	August Qualifying Capacity				Capacity Available at Peak	2031 LCR Need
Local Area Name	**QF/ Muni (MW)**	**Non-Solar (MW)**	**Solar (MW)**	**Total (MW)**	**Total (MW)**	**Capacity Needed**
Humboldt	0	176	0	**176**	**176**	**176***
North Coast/ North Bay	136	946	0	**1082**	**1082**	**1024**
Sierra	1237	687	0	**1924**	**1924**	**1924***
Stockton	108	726	13	**847**	**834**	**527***
Greater Bay	572	7933	8	**8513**	**8513**	**8315***
Greater Fresno	206	3540	550	**4296**	**3746**	**3060***
Kern	10	376	67	**453**	**386**	**421***
Big Creek/ Ventura	410	4640	378	**5428**	**5428**	**770**
LA Basin	1209	10617	18	**11844**	**11844**	**8017**
San Diego/ Imperial Valley	2	6511	243	**6756**	**6756**	**2037**
Total	3890	36152	1277	**41319**	**40689**	**26271**

* Details about magnitude of deficiencies can be found in the applicable section below. Resource deficient areas and sub-area implies that in order to comply with the criteria, at summer peak, load may be shed immediately after the first contingency.

The estimated results for years 2028 and 2029 LCR needs are provided below:

2028 Estimated Local Capacity Needs (No technical studies conducted)

	August Qualifying Capacity				Capacity Available at Peak	2028 LCR Need
Local Area Name	**QF/ Muni (MW)**	**Non-Solar (MW)**	**Solar (MW)**	**Total (MW)**	**Total (MW)**	**Capacity Needed**
Humboldt	0	176	0	**176**	**176**	**156**
North Coast/ North Bay	136	946	0	**1082**	**1082**	**700**
Sierra	1237	687	0	**1924**	**1924**	**1913***
Stockton	132	634	13	**779**	**766**	**779***
Greater Bay	572	7933	8	**8513**	**8513**	**8315***
Greater Fresno	206	3540	550	**4296**	**3746**	**2333***
Kern	10	376	67	**453**	**386**	**342**
Big Creek/ Ventura	410	4640	378	**5428**	**5428**	**721**
LA Basin	1209	10617	18	**11844**	**11844**	**7272**
San Diego/ Imperial Valley	2	6204	243	**6449**	**6449**	**2014**
Total	**3914**	**35753**	**1277**	**40944**	**40314**	**24545**

2029 Estimated Local Capacity Needs (No technical studies conducted)

	August Qualifying Capacity				Capacity Available at Peak	2029 LCR Need
Local Area Name	**QF/ Muni (MW)**	**Non-Solar (MW)**	**Solar (MW)**	**Total (MW)**	**Total (MW)**	**Capacity Needed**
Humboldt	0	176	0	**176**	**176**	**163**
North Coast/ North Bay	136	946	0	**1082**	**1082**	**808**
Sierra	1237	687	0	**1924**	**1924**	**1924***
Stockton	108	726	13	**847**	**834**	**847***
Greater Bay	572	7933	8	**8513**	**8513**	**8315***
Greater Fresno	206	3540	550	**4296**	**3746**	**2575***
Kern	10	376	67	**453**	**386**	**368***
Big Creek/ Ventura	410	4640	378	**5428**	**5428**	**737**
LA Basin	1209	10617	18	**11844**	**11844**	**7721**
San Diego/ Imperial Valley	2	6204	243	**6449**	**6449**	**2022**
Total	**3890**	**35845**	**1277**	**41012**	**40382**	**25480**

* Details about magnitude of deficiencies can be found in the applicable section below. Resource deficient areas and sub-area implies that in order to comply with the criteria, at summer peak, load may be shed immediately after the first contingency.

The studied results for year 2026 LCR needs are provided below for comparison:

2026 Local Capacity Needs

	August Qualifying Capacity				Capacity Available at Peak	2026 LCR Need
Local Area Name	**QF/ Muni (MW)**	**Non-Solar (MW)**	**Solar (MW)**	**Total (MW)**	**Total (MW)**	**Capacity Needed**
Humboldt	0	174	0	**174**	**174**	**136**
North Coast/ North Bay	135	893	0	**1028**	**1028**	**848**
Sierra	1236	707	0	**1943**	**1943**	**1354***
Stockton	130	613	15	**758**	**743**	**756***
Greater Bay	596	7902	8	**8506**	**8501**	**7558***
Greater Fresno	205	3194	440	**3839**	**3399**	**2100***
Kern	12	377	71	**460**	**389**	**452***
Big Creek/ Ventura	448	4258	400	**5106**	**5106**	**1369**
LA Basin	1266	9481	29	**10776**	**10776**	**5812**
San Diego/ Imperial Valley	3	5893	243	**6139**	**6139**	**2631**
Total	**4031**	**33491**	**1206**	**38729**	**38198**	**23016**

* Details about magnitude of deficiencies can be found in the applicable section below. Resource deficient areas and sub-area implies that in order to comply with the criteria, at summer peak, load may be shed immediately after the first contingency.

The narrative for each Local Capacity Area lists important new projects included in the base cases as well as a description of the reason for changes between the 2026 and 2027 LCT study results.

Intentionally left blank

Table of Contents

Executive Summary ... 1
1. Overview of the Study: Inputs, Outputs and Options ... 9
1.1 Objectives ... 9
1.2 Key Study Assumptions ... 9
1.2.1 Inputs, Assumptions and Methodology ... 9
1.3 Grid Reliability ... 11
1.4 Application of N-1, N-1-1, and N-2 Criteria ... 11
1.5 Performance Criteria ... 12
1.5.1 Performance Criteria ... 12
1.5.2 CAISO Statutory Obligation Regarding Safe Operation ... 13
2. Assumption Details: How the Study was Conducted ... 17
2.1 System Planning Criteria ... 17
2.1.1 Power Flow Assessment: ... 20
2.1.2 Post Transient Load Flow Assessment: ... 21
2.1.3 Stability Assessment: ... 21
2.1.4 Engineering Estimate for Intermediate Years: ... 21
2.2 Load Forecast ... 23
2.2.1 System Forecast ... 23
2.2.2 Base Case Load Development Method ... 23
2.3 Power Flow Program Used in the LCR analysis ... 24
2.4 Estimate of Battery Storage Needs due to Charging Constraints ... 25
3. Locational Capacity Requirement Study Results ... 27
3.1 Summary of Study Results ... 27
3.2 Summary of Zonal Needs ... 30
3.3 Summary of Results by Local Area ... 31
3.3.1 Humboldt Area ... 31
3.3.2 North Coast / North Bay Area ... 34
3.3.3 Sierra Area ... 42
3.3.4 Stockton Area ... 53
3.3.5 Greater Bay Area ... 61
3.3.6 Greater Fresno Area ... 77
3.3.7 Kern Area ... 97
3.3.8 Big Creek/Ventura Area ... 108
3.3.9 LA Basin Area ... 114
3.3.10 San Diego-Imperial Valley Area ... 124
3.3.11 Valley Electric Area ... 132
3.4 Summary of Engineering Estimates for Intermediate Years by Local Area 133
4. Energy Storage Assessment as Part of LCR Study ... 139
4.1 Introduction ... 139
4.2 Energy Storage Assessment Approach ... 139
4.2.1 Load Data ... 140
4.2.2 Load Serving Capabilities ... 140

4.2.3 Estimating Energy Storage Addition 141
4.2.4 1-to-1 Replacement with 4-hour Storage 141
Attachment A - List of physical resources accounted for in the 2027 and 2031 Local Capacity Technical studies 142
Attachment B – Effectiveness factors for procurement guidance 143

Intentionally left blank

1. Overview of the Study: Inputs, Outputs and Options

1.1 Objectives

The intent of the 2027 LCT Study is to identify specific areas within the CAISO Balancing Authority Area that have limited import capability and determine the minimum generation capacity (MW) necessary to mitigate the local reliability problems in those areas, as was the objective of all previous Local Capacity Technical Studies.

To aid procurement, this LCT study provides load profiles and transmission capacity information that shows the effectiveness of local resources in meeting temporal local reliability needs.

1.2 Key Study Assumptions

1.2.1 Inputs, Assumptions and Methodology

The inputs, assumptions and methodology were discussed and agreed to by stakeholders at the 2027 LCT Study Criteria, Methodology and Assumptions Stakeholder Meeting held on November 3, 2025. Except for Study Criteria all other Methodology and Assumptions are similar to those used and incorporated in previous LCT studies. The following table sets forth a summary of the approved inputs and methodology that have been used in this 2027 LCT Study:

Table 1.2-1 Summary Table of Inputs and Methodology Used in this LCT Study:

Issue	How Incorporated into this LCT Study:
Input Assumptions:	
Transmission System Configuration	The existing transmission system has been modeled, including all projects operational on or before June 1, of the study year and all other feasible operational solutions brought forth by the PTOs and as agreed to by the CAISO.
Generation Modeled	The existing generation resources has been modeled and also includes all projects that will be on-line and commercial on or before June 1, of the study year
Load Forecast	Uses a 1-in-10 year summer peak load forecast
Methodology:	

Maximize Import Capability	Import capability into the load pocket has been maximized, thus minimizing the generation required in the load pocket to meet applicable reliability requirements.
QF/Nuclear/State/Federal Units	Regulatory Must-take and similarly situated units like QF/Nuclear/State/Federal resources have been modeled on-line at qualifying capacity output values for purposes of this LCT Study.
Maintaining Path Flows	Path flows have been maintained below all established path ratings into the load pockets, including the 500 kV. For clarification, given the existing transmission system configuration, the only 500 kV path that flows directly into a load pocket and will, therefore, be considered in this LCT Study is the South of Lugo transfer path flowing into the LA Basin.
Performance Criteria:	
All Performance Levels, including incorporation of PTO operational solutions	This LCT Study is being published based on the most stringent of all mandatory reliability standards. In addition, the CAISO will incorporate all new projects and other feasible and CAISO-approved operational solutions brought forth by the PTOs that can be operational on or before June 1, of the study year. Any such solutions that can reduce the need for procurement to meet the mandatory standards will be incorporated into the LCT Study.
Load Pocket:	
Fixed Boundary, including limited reference to published effectiveness factors	This LCT Study has been produced based on load pockets defined by a fixed boundary. The CAISO only publishes effectiveness factors where they are useful in facilitating procurement where excess capacity exists within a load pocket.

Further details regarding the 2027 LCT Study methodology and assumptions are provided in Section III, below.

1.3 Grid Reliability

Service reliability builds from grid reliability because grid reliability is reflected in the Reliability Standards of the North American Electric Reliability Council (NERC) and the Western Electricity Coordinating Council ("WECC") Regional Criteria (collectively "Reliability Standards"). The Reliability Standards apply to the interconnected electric system in the United States and are intended to address the reality that within an integrated network, whatever one Balancing Authority Area does can affect the reliability of other Balancing Authority Areas. Consistent with the mandatory nature of the Reliability Standards, the CAISO is under a statutory obligation to ensure efficient use and reliable operation of the transmission grid consistent with achievement of the Reliability Standards.[2] The CAISO is further under an obligation, pursuant to its FERC-approved Transmission Control Agreement, to secure compliance with all "Applicable Reliability Criteria." Applicable Reliability Criteria consists of the Reliability Standards as well as reliability criteria adopted by the CAISO (Grid Planning Standards).

The Reliability Standards define reliability on interconnected electric systems using the terms "adequacy" and "security." "Adequacy" is the ability of the electric systems to supply the aggregate electrical demand and energy requirements of their customers at all times, taking into account physical characteristics of the transmission system such as transmission ratings and scheduled and reasonably expected unscheduled outages of system elements. "Security" is the ability of the electric systems to withstand sudden disturbances such as electric short circuits or unanticipated loss of system elements. The Reliability Standards are organized by Performance Categories. Certain categories require that the grid operator not only ensure that grid integrity is maintained under certain adverse system conditions (e.g., security), but also that all customers continue to receive electric supply to meet demand (e.g., adequacy). In that case, grid reliability and service reliability would overlap. But there are other levels of performance where security can be maintained without ensuring adequacy.

1.4 Application of N-1, N-1-1, and N-2 Criteria

The CAISO will maintain the system in a safe operating mode at all times. This obligation translates into respecting the Reliability Criteria at all times, for example during normal operating conditions (N-0) the CAISO must protect for all single contingencies (N-1) and common mode (N-2) double line outages. Also, after a single contingency, the CAISO must re-adjust the system to support the loss of the next most stringent contingency. This is referred to as the N-1-1 condition.

The N-1-1 vs N-2 terminology was introduced only as a temporal differentiation between two existing NERC Category P6 and P7 events. N-1-1 represents NERC Category C6 ("category P1 contingency, manual system adjustment, followed by another category P1 contingency"). The N-2 represents NERC Category P7 ("any two circuits of a multiple circuit tower line") as well as WECC-S2 (for 500 kV only) ("any two circuits in the same right-of-way") with no manual system adjustment between the two contingencies.

[2] Pub. Utilities Code § 345

1.5 Performance Criteria

As set forth on the Summary Table of Inputs and Methodology, this LCR Report is based on the most stringent mandatory standard (NERC, WECC or CAISO). The CAISO tests the electric system in regards to thermal overloads as well as dynamic and reactive margin compliance with the existing standards.

1.5.1 Performance Criteria

Category P0, P1 & P3 system performance requires that all thermal and voltage limits must be within their "Applicable Rating," which, in this case, are the emergency ratings as generally determined by the PTO or facility owner. Applicable Rating includes a temporal element such that emergency ratings can only be maintained for certain duration. Under this category, load cannot be shed in order to assure the Applicable Ratings are met however there is no guarantee that facilities are returned to within normal ratings or to a state where it is safe to continue to operate the system in a reliable manner such that the next element out will not cause a violation of the Applicable Ratings.

The NERC Planning Standards require system operators to "look forward" to make sure they safely prepare for the "next" N-1 following the loss of the "first" N-1 (stay within Applicable Ratings after the "next" N-1). This is commonly referred to as N-1-1. Because it is assumed that some time exists between the "first" and "next" element losses, operating personnel may make any reasonable and feasible adjustments to the system to prepare for the loss of the second element, including, operating procedures, dispatching generation, moving load from one substation to another to reduce equipment loading, dispatching operating personnel to specific station locations to manually adjust load from the substation site, or installing a "Special Protection Scheme" that would remove pre-identified load from service upon the loss of the "next " element.[3] All Category P2, P4, P5, P6, P7 and extreme event requirements in this report refer to situations when in real time (N-0) or after the first contingency (N-1) the system requires additional readjustment in order to prepare for the next worst contingency. In this time frame, load drop is not allowed per existing planning criteria.

Generally, Category P2, P4, P5, P6, P7 and extreme event describes system performance that is expected following the loss of two or more system elements. This loss of two elements is generally expected to happen simultaneously, referred to as N-2. It should be noted that once the "next" element is lost after the first contingency, as discussed above under the Performance Criteria P1, the event is effectively a Category P6 or N-1-1 scenario. As noted above, depending on system design and expected system impacts, the **planned and controlled** interruption of

[3] A Special Protection Scheme is typically proposed as an operational solution that does not require additional generation and permits operators to effectively prepare for the next event as well as ensure security should the next event occur. However, these systems have their own risks, which limit the extent to which they could be deployed as a solution for grid reliability augmentation. While they provide the value of protecting against the next event without the need for pre-contingency load shedding, they add points of potential failure to the transmission network. This increases the potential for load interruptions because sometimes these systems will operate when not required and other times they will not operate when needed.

supply to customers (load shedding), the removal from service of certain generators and curtailment of exports may be utilized to maintain grid "security."

1.5.2 CAISO Statutory Obligation Regarding Safe Operation

The ISO must maintain the system in a safe operating mode at all times. This obligation translates into respecting the Reliability Criteria at all times. For example, during normal operating conditions (8760 hours per year), the ISO must protect for all single contingencies (P1, P2) and multiple contingencies (P4, P5) as well as common mode double line outages (P7). As a further example, after a single contingency, the ISO must readjust the system in order to be able to support the loss of the next most stringent contingency (P3 , P6 and P1+P7 resulting in potential voltage collapse or dynamic instability).

Figure 1.5-1 Temporal graph of LCR Category P0-P7

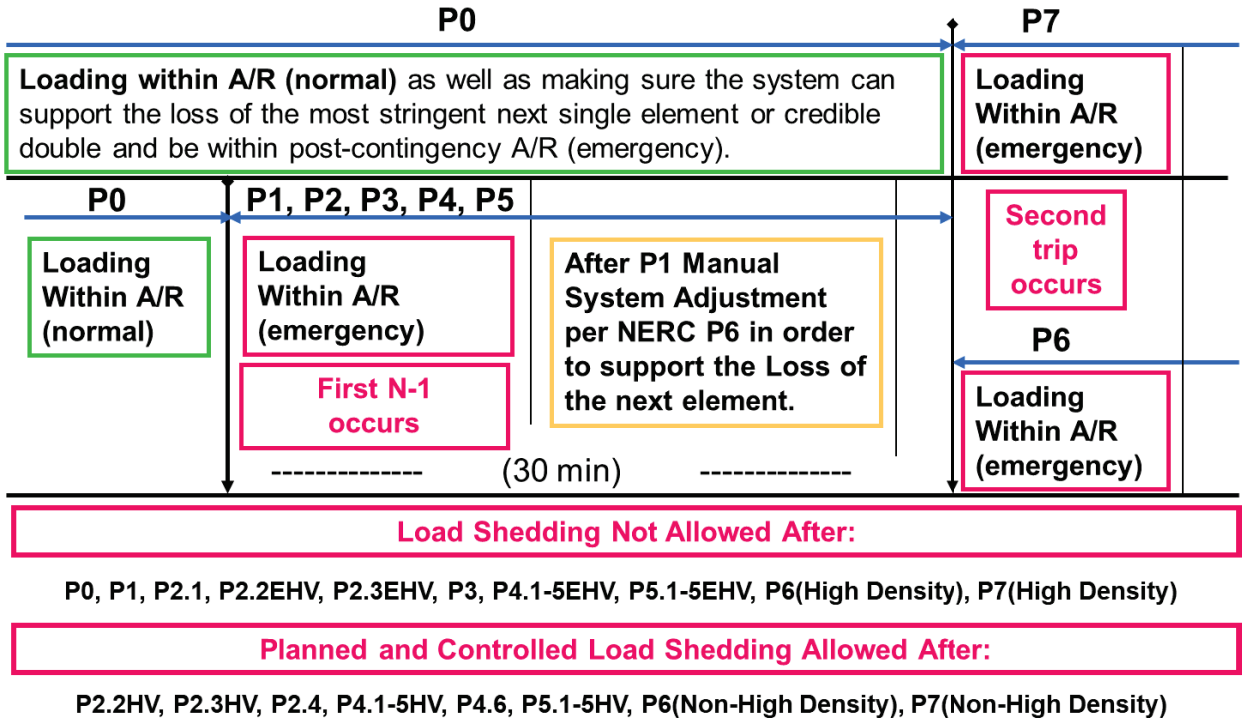

The following definitions guide the CAISO's interpretation of the Reliability Criteria governing safe mode operation and are used in this LCT Study:

Applicable Rating:

This represents the equipment rating that will be used under certain contingency conditions.

Normal rating is to be used under normal conditions.

Long-term emergency ratings, if available, will be used in all emergency conditions as long as "system readjustment" is provided in the amount of time given (specific to each element) to reduce the flow to within the normal ratings. If not available, the normal rating is to be used.

Short-term emergency ratings, if available, can be used as long as "system readjustment" is provided in the "short-time" available in order to reduce the flow to within the long-term emergency ratings where the element can be kept for another length of time (specific to each element) before the flow needs to be reduced the below the normal ratings. If not available long-term emergency rating should be used.

Temperature-adjusted ratings shall not be used because this is a year-ahead study, not a real-time tool, and as such the worst-case scenario must be covered. In case temperature-adjusted ratings are the only ratings available then the minimum rating (highest temperature) given the study conditions shall be used.

CAISO Transmission Register is the only official keeper of all existing ratings mentioned above.

Ratings for future projects provided by PTO and agreed upon by the CAISO shall be used.

Other short-term ratings not included in the CAISO Transmission Register may be used as long as they are engineered, studied and enforced through clear operating procedures that can be followed by real-time operators.

Path Ratings need to be maintained within their limits in order to assure that proper capacity is available in order to operate the system in real-time in a safe operating zone.

Controlled load drop:

This is achieved with the use of a Special Protection Scheme.

Planned load drop:

This is achieved when the most limiting equipment has short-term emergency ratings AND the operators have an operating procedure that clearly describes the actions that need to be taken in order to shed load.

Special Protection Scheme:

All known SPS shall be assumed. New SPS must be verified and approved by the CAISO and must comply with the new SPS guideline described in the CAISO Planning Standards.

System Readjustment:

This represents the actions taken by operators in order to bring the system within a safe operating zone after any given contingency in the system.

Actions that can be taken as system readjustment after a Category P1, P2.1, P2.2(EHV), P2.3(EHV), P3, P4.1-5(EHV), P5.1-5(EHV), P6(high density area)&P7(high density area) contingency:

1. System configuration change – based on validated and approved operating procedures

2. Generation re-dispatch

a. Decrease generation (up to 1150 MW) – limit given by single contingency SPS as part of the ISO Grid Planning standards (ISO SPS3)

b. Increase generation – this generation will become part of the LCR need

Actions, which shall not be taken as system readjustment after a Category P1, P2.1, P2.2(EHV), P2.3(EHV), P3, P4.1-5(EHV), P5.1-5(EHV), P6(high density area)&P7(high density area) contingency:

1. Load drop – based on the intent of the ISO/WECC and NERC criteria for category P1 contingencies.

An objective of the planning process is to minimize the likelihood and magnitude of Non-Consequential Load Loss following Contingency events. NERC and ISO Planning standards mandate that no load shedding should be done immediately after a Category P1, P2.1, P2.2(EHV), P2.3(EHV), P3, P4.1-5(EHV), P5.1-5(EHV), P6(high density area)&P7(high density area) contingency. The system should be planned with no load shedding regardless of when it may occur (immediately or within 15-30 minutes after the first contingency). It follows that load shedding may not be utilized as part of the system readjustment period – in order to protect for the next most limiting contingency. Therefore, if there are available resources in the local area, such resources should be used during the manual adjustment period (and included in the LCR need) before resorting to shedding firm load.

Firm load shedding is allowed in a planned and controlled manner after the first contingency in P2.2(HV), P2.3(HV), P2.4, P4.1-5(HV), P4.6, P5.1-5(HV) and after the second contingency in P6(non-high density area), P7(non-high density area) & P1 system adjusted followed by P7 category events.

This interpretation tends to guarantee that firm load shedding is used to address Category P1, P2.1, P2.2(EHV), P2.3(EHV), P3, P4.1-5(EHV), P5.1-5(EHV), P6(high density area)&P7(high density area) conditions only under the limited circumstances where no other resource or validated operational measure is available. A contrary interpretation would constitute a departure from existing practice and degrade current service expectations by increasing load's exposure to service interruptions.

Time allowed for manual readjustment:

Tariff Section 40.3.1.1, requires the CAISO, in performing the Local Capacity Technical Study, to apply the following reliability criterion:

Time Allowed for Manual Adjustment: This is the amount of time required for the Operator to take all actions necessary to prepare the system for the next Contingency. The time should not be more than thirty (30) minutes.

The CAISO Planning Standards also impose this manual readjustment requirement. As a parameter of the Local Capacity Technical Study, the CAISO must assume that as the system operator the CAISO will have sufficient time to:

(1) make an informed assessment of system conditions after a contingency has occurred;

(2) identify available resources and make prudent decisions about the most effective system redispatch;

(3) manually readjust the system within safe operating limits after a first contingency to be prepared for the next contingency; and

(4) allow sufficient time for resources to ramp and respond according to the operator's redispatch instructions. This all must be accomplished within 30 minutes.

Local capacity resources can meet this requirement by either (1) responding with sufficient speed, allowing the operator the necessary time to assess and redispatch resources to effectively reposition the system within 30 minutes after the first contingency, or (2) having sufficient energy available for frequent dispatch on a pre-contingency basis to ensure the operator can meet minimum online commitment constraints or reposition the system within 30 minutes after the first contingency occurs. Accordingly, when evaluating resources that satisfy the requirements of the CAISO Local Capacity Technical Study, the CAISO assumes that local capacity resources need to be available in no longer than 20 minutes so the CAISO and demand response providers have a reasonable opportunity to perform their respective and necessary tasks and enable the CAISO to reposition the system within the 30 minutes in accordance with applicable reliability criteria.

2. Assumption Details: How the Study was Conducted

2.1 System Planning Criteria

The following table provides a comparison of system planning criteria, based on the NERC performance standards, used in the study:

Table 2.1-1: Criteria Comparison for Bulk Electric System contingencies

Contingency Component(s)	Mandatory Reliability Standards	Old Local Capacity Criteria	Local Capacity Criteria
P0 – No Contingencies	X	X	X
P1 – Single Contingency			
1. Generator (G-1)	X	X[1]	X[1]
2. Transmission Circuit (L-1)	X	X[1]	X[1]
3. Transformer (T-1)	X	X[1,2]	X[1]
4. Shunt Device	X		X[1]
5. Single Pole (dc) Line	X	X[1]	X[1]
P2 – Single contingency			
1. Opening a line section w/o a fault	X		X
2. Bus Section fault	X		X
3. Internal Breaker fault (non-Bus-tie Breaker)	X		X
4. Internal Breaker fault (Bus-tie Breaker)	X		X
P3 – Multiple Contingency – G-1 + system adjustment and:			
1. Generator (G-1)	X	X	X
2. Transmission Circuit (L-1)	X	X	X
3. Transformer (T-1)	X	X[2]	X
4. Shunt Device	X		X
5. Single Pole (dc) Line	X	X	X
P4 – Multiple Contingency - Fault plus stuck breaker			
1. Generator (G-1)	X		X
2. Transmission Circuit (L-1)	X		X
3. Transformer (T-1)	X		X
4. Shunt Device	X		X
5. Bus section	X		X
6. Bus-tie breaker	X		X
P5 – Multiple Contingency – Relay failure (delayed clearing)			
1. Generator (G-1)	X		X
2. Transmission Circuit (L-1)	X		X
3. Transformer (T-1)	X		X
4. Shunt Device	X		X
5. Bus section	X		X

P6 – Multiple Contingency – P1.2-P1.5 system adjustment and:			
1. Transmission Circuit (L-1)	X	x	X
2. Transformer (T-1)	X	x	X
3. Shunt Device	X		X
4. Bus section	X		X
P7 – Multiple Contingency - Fault plus stuck breaker			
1. Two circuits on common structure (L-2)	X	X	X
2. Bipolar DC line	X	X	X
Extreme event – loss of two or more elements			
Two generators (Common Mode) G-2	X[4]	X	X[4]
Any P1.1-P1.3 & P1.5 system readjusted (Common Mode) L-2	X[4]	X[3]	X[5]
All other extreme combinations.	X[4]		X[4]

1 System must be able to readjust to a safe operating zone in order to be able to support the loss of the next contingency.
2 A thermal or voltage criterion violation resulting from a transformer outage may not be cause for a local area reliability requirement if the violation is considered marginal (e.g. acceptable loss of facility life or low voltage), otherwise, such a violation will necessitate creation of a requirement.
3 Evaluate for risks and consequence, per NERC standards. No voltage collapse or dynamic instability allowed.
4 Evaluate for risks and consequence, per NERC standards.
5 Expanded to include any P1 system readjustment followed by any P7 without stuck breaker. For voltage collapse or dynamic instability situations mitigation is required "if there is a risk of cascading" beyond a relatively small predetermined area – less than 250 MW - directly affected by the outage.

Table 2.1-2: Criteria Comparison for non-Bulk Electric System contingencies

Contingency Component(s)	Mandatory Reliability Standards	Old Local Capacity Criteria	Local Capacity Criteria
P0 – No Contingencies	X	X	X
P1 – Single Contingency			
1. Generator (G-1)	X	X[1]	X
2. Transmission Circuit (L-1)	X	X[1]	X
3. Transformer (T-1)	X	X[1,2]	X
4. Shunt Device	X		X
5. Single Pole (dc) Line	X	X[1]	X
P2 – Single contingency			
1. Opening a line section w/o a fault			
2. Bus Section fault			
3. Internal Breaker fault (non-Bus-tie Breaker)			
4. Internal Breaker fault (Bus-tie Breaker)			

P3 – Multiple Contingency – G-1 + system adjustment and:			
1. Generator (G-1)	X	X	X
2. Transmission Circuit (L-1)	X	X	X
3. Transformer (T-1)	X	X[2]	X
4. Shunt Device	X		X
5. Single Pole (dc) Line	X	X	X
P4 – Multiple Contingency - Fault plus stuck breaker			
1. Generator (G-1)			
2. Transmission Circuit (L-1)			
3. Transformer (T-1)			
4. Shunt Device			
5. Bus section			
6. Bus-tie breaker			
P5 – Multiple Contingency – Relay failure (delayed clearing)			
1. Generator (G-1)			
2. Transmission Circuit (L-1)			
3. Transformer (T-1)			
4. Shunt Device			
5. Bus section			
P6 – Multiple Contingency – P1.2-P1.5 system adjustment and:			
1. Transmission Circuit (L-1)		x	
2. Transformer (T-1)		x	
3. Shunt Device			
4. Bus section			
P7 – Multiple Contingency - Fault plus stuck breaker			
1. Two circuits on common structure (L-2)		X	
2. Bipolar DC line		X	
Extreme event – loss of two or more elements			
Two generators (Common Mode) G-2		X	
Any P1.1-P1.3 & P1.5 system readjusted (Common Mode) L-2		X[3]	
All other extreme combinations.			

1 System must be able to readjust to a safe operating zone in order to be able to support the loss of the next contingency.
2 A thermal or voltage criterion violation resulting from a transformer outage may not be cause for a local area reliability requirement if the violation is considered marginal (e.g. acceptable loss of facility life or low voltage), otherwise, such a violation will necessitate creation of a requirement.
3 Evaluate for risks and consequence, per NERC standards. No voltage collapse or dynamic instability allowed.

A significant number of simulations were run to determine the most critical contingencies within each local area. Using power flow, post-transient load flow, and stability assessment tools, the system performance results of all tested contingencies were measured against the system performance requirements defined by the criteria shown in Tables 1 and 2. Where the specific system performance requirements were not met, generation was adjusted until performance requirements were met for the local area. The adjusted generation constitutes the minimum

generation needed in the local area. The following describes how the criteria were tested for the specific type of analysis performed.

2.1.19 Power Flow Assessment:

Table 2.1-3 Power flow criteria

Contingencies	Thermal Criteria[1]	Voltage Criteria[2]
P0	Applicable Rating	Applicable Rating
P1 [3]	Applicable Rating	Applicable Rating
P2	Applicable Rating	Applicable Rating
P3	Applicable Rating	Applicable Rating
P4	Applicable Rating	Applicable Rating
P5	Applicable Rating	Applicable Rating
P6 [4]	Applicable Rating	Applicable Rating
P7	Applicable Rating	Applicable Rating
P1 + P7 [4]	-	No Voltage Collapse

1 Applicable Rating – Based on CAISO Transmission Register or facility upgrade plans including established Path ratings.

2 Applicable Rating – CAISO Grid Planning Criteria or facility owner criteria as appropriate.

3 Following the first contingency (N-1), the generation must be sufficient to allow the operators to bring the system back to within acceptable operating range (voltage and loading) and/or appropriate OTC following the studied outage conditions and be able to safely prepare for the loss of the next most stringent element and be within Applicable Rating after the loss of the second element.

4 During normal operation or following the first contingency (N-1), the generation must be sufficient to allow the operators to prepare for the next worst N-1 or common mode N-2 without pre-contingency interruptible or firm load shedding. SPS/RAS/Safety Nets may be utilized to satisfy the criteria after the second N-1 or common mode N-2 except if the problem is of a thermal nature such that short-term ratings could be utilized to provide the operators time to shed either interruptible or firm load.

2.1.20 Post Transient Load Flow Assessment:

Table 2.1-4 Post transient load flow criteria

Contingencies	Reactive Margin Criteria [2]
Selected [1]	Applicable Rating

1 If power flow results indicate significant low voltages for a given power flow contingency, simulate that outage using the post transient load flow program. The post-transient assessment will develop appropriate Q/V and/or P/V curves.

2 Applicable Rating – positive margin based on the higher of imports or load increase by 5% for N-1 contingencies, and 2.5% for N-2 contingencies.

2.1.21 Stability Assessment:

Table 2.1-5 Stability criteria

Contingencies	Stability Criteria [2]
Selected[1]	Applicable Rating

1 Base on historical information, engineering judgment and/or if power flow or post transient study results indicate significant low voltages or marginal reactive margin for a given contingency.

2 Applicable Rating – CAISO Grid Planning Criteria or facility owner criteria as appropriate.

2.1.22 Engineering Estimate for Intermediate Years:

Due to combined CEC/CPUC/CAISO timelines required by the RA process, the ISO must estimate LCR requirement for intermediate years, between the technical studies run for years one and five.

ISO will be using an engineering estimate for intermediate years. Elements of the engineering judgement estimates are described below:

2.1.22.1 *Net Peak Load Growth driven estimate*

Assuming nothing else changes, no transmission or resource mix changes, including no changes to long-term contractual arrangements, the increase (or decrease) in LCR, assuming a linear function, will be estimated based on ratio of load growth to ratio of LCR needs to be multiplied by the number of years using the following formula:

LCR for Year of Need = Year 1 LCR + [(Year 5 LCR-Year 1 LCR)/4] X (Year of Need-Year 1)

For non-linear functions, like voltage collapse or dynamic instability, ISO will use engineering judgment in order to provide estimated LCR requirement.

2.1.22.2 *Single New Transmission driven estimate*

Assuming nothing else changes, no load growth, no other new transmission projects or resource mix changes, including no changes to long-term contractual arrangements, the increase (or decrease in LCR) will be estimated based on a step function (usually decreasing the LCR needs) in the year when the transmission project is supposed to be first operational (if in-service before June 1-st of estimated year for summer peaking areas).

2.1.22.3 *Single New Resource driven estimate*

Assuming nothing else changes, no load growth, no new transmission projects or any other resource mix changes, including no changes to long-term contractual arrangements, the increase (or decrease in LCR) will be estimated based on a step function if:

a) The new resource is catalogued with a higher dispatch priority or the same priority as the marginal resource used for establishment of LCR need AND

b) The new resource has a significantly different (10% or more) effectiveness factor difference vs. the marginal resource used for the establishment of the LCR need.

Priority dispatch order (from LCR study manual):

1. QF/MUNI/State/Federal
2. RA resources under long-term contracts
3. Unknown contractual status

2.1.22.4 *Single Change in Resource contractual status driven estimate*

Assuming nothing else changes, no load growth, no new transmission projects or resource mix changes, including no changes to other long-term contractual arrangements, the increase (or decrease in LCR) will be estimated based on a step function if:

a) The resource is moving to a higher dispatch priority or the same priority as the marginal resource used for establishment of LCR need AND

b) The resource has a significantly different (10% or more) effectiveness factor difference vs. the marginal resource used for the establishment of the LCR need.

2.1.22.5 *Single Known Resource Retirement driven estimate*

Assuming nothing else changes, no load growth, no new transmission projects or other resource mix changes, including no changes to long-term contractual arrangements, the increase (or decrease in LCR) will be estimated based on a step function if:

a) The retired resource was included in a higher dispatch priority or the same priority as the marginal resource used for establishment of LCR need AND

b) The resource has a significantly different (10% or more) effectiveness factor difference vs. the marginal resource used for the establishment of the LCR need.

2.1.22.6 *Multi Reason Change driven estimate*

From multi-year available LCR studies the ISO will use engineering judgement, guided by the above explain single change principles, in order to estimate intermediate year LCR needs any time more than one factor is influencing the LCR results:

a) Net peak load growth

b) New transmission project(s)

c) New resource(s)

d) Change in resource contractual status

e) Known resource retirement(s)

2.2 Load Forecast

2.2.1 System Forecast

The California Energy Commission (CEC) derives the load forecast at the system and Participating Transmission Owner (PTO) levels. This relevant CEC forecast is then distributed across the entire system, down to the local area, division and substation level. The PTOs use an econometric equation to forecast the system load. The predominant parameters affecting the system load are (1) number of households, (2) economic activity (gross metropolitan products, GMP), (3) temperature and (4) increased energy efficiency and distributed generation programs.

2.2.2 Base Case Load Development Method

The method used to develop the load in the base case is a melding process that extracts, adjusts and modifies the information from the system, distribution and municipal utility forecasts. The melding process consists of two parts: Part 1 deals with the PTO load and Part 2 deals with the municipal utility load. There may be small differences between the methodologies used by each PTO to disaggregate the CEC load forecast to their level of local area as well as bar-bus model.

2.2.2.1 *PTO Loads in Base Case*

The methods used to determine the PTO loads are, for the most part, similar. One part of the method deals with the determination of the division[4] loads that would meet the requirements of 1-in-5 or 1-in-10 system or area base cases and the other part deals with the allocation of the division load to the transmission buses.

a. Determination of division loads

The annual division load is determined by summing the previous year division load and the current division load growth. Thus, the key steps are the determination of the initial year division load and

[4] Each PTO divides its territory in a number of smaller area named divisions. These are usually smaller and compact areas that have the same temperature profile.

the annual load growth. The initial year for the base case development method is based heavily on recorded data. The division load growth in the system base case is determined in two steps. First, the total PTO load growth for the year is determined, as the product of the PTO load and the load growth rate from the system load forecast. Then this total PTO load growth is allocated to the division, based on the relative magnitude of the load growth projected for the divisions by the distribution planners. For example, for the 1-in-10 area base case, the division load growth determined for the system base case is adjusted to the 1-in-10 temperature using the load temperature relation determined from the latest peak load and temperature data of the division.

b. Allocation of division load to transmission bus level

Since the loads in the base case are modeled at the various transmission buses, the division loads developed must be allocated to those buses. The allocation process is different depending on the load types. For the most part, each PTO classifies its loads into four types: conforming, non-conforming, self-generation and generation-plant loads. Since the non-conforming and self-generation loads are assumed to not vary with temperature, their magnitude would be the same in the system or area base cases of the same year. The remaining load (the total division load developed above, less the quantity of non-conforming and self-generation load) is the conforming load. The remaining load is allocated to the transmission buses based on the relative magnitude of the distribution forecast. The summation of all base case loads is generally higher than the load forecast because some load, i.e., self-generation and generation-plant, are behind the meter and must be modeled in the base cases. However, for the most part, metered or aggregated data with telemetry is used to come up with the load forecast.

2.2.2.2 *Municipal Loads in Base Case*

The municipal utility forecasts that have been provided to the CEC and PTOs for the purposes of their base cases were also used for this study.

2.3 Power Flow Program Used in the LCR analysis

The technical studies were conducted using General Electric's Power System Load Flow (GE PSLF) program version 23.2.8.1 and PowerGem's Transmission Adequacy and Reliability Assessment (TARA) program version 2601.1. This GE PSLF program is available directly from GE or through the Western System Electricity Council (WECC) to any member and TARA program is commercially available.

To evaluate Local Capacity Areas, the starting base case was adjusted to reflect the latest generation and transmission projects as well as the one-in-ten-year peak load forecast for each Local Capacity Area as provided to the CAISO by the PTOs.

Electronic contingency files provided by the PTOs were utilized to perform the numerous contingencies required to identify the LCR. These contingency files include remedial action and special protection schemes that are expected to be in operation during the year of study. A CAISO created EPCL (a GE programming language contained within the GE PSLF package) routine and/or TARA software were used to run the combination of contingencies; however, other routines are available from WECC with the GE PSLF package or can be developed by third parties to

identify the most limiting combination of contingencies requiring the highest amount of generation within the local area to maintain power flows within applicable ratings.

2.4 Estimate of Battery Storage Needs due to Charging Constraints

Local areas and sub-areas have limited transmission capability and therefore rely on internal resources to be available in order to reliably serve internal load. Battery storage will help serve local load during the discharge cycle, however it will also increase local load during the charging cycle.

Due to recent procurement activities geared toward the acquisition of this type of technology, the CAISO is herein estimating the characteristics (MW, MWh, discharge duration) required from battery storage technology in order to seamlessly integrate in each local area and sub-area.

The CAISO expects that for batteries that displace other local resource adequacy resources, the transmission capability under the most limiting contingency and the other local capacity resources must be sufficient to recharge the batteries in anticipation of the outage continuing through the night and into the next day's peak load period.

For each local area and sub-area, the CAISO has estimated the battery storage characteristics, given their unique load shape, constraints and requirements as well as the energy characteristics of other resources required to meet standards. Due to this fact, the strict addition of the sub-area battery storage characteristics (MW, MWh and duration) may not closely align with the overall local area battery storage characteristic requirements (MW, MWh and duration).

Assumptions

1) Total load serving capability includes capability from transmission system and local generation needed for LCR under the worst contingency.
2) Storage added replaces existing generation MW for MW. First the batteries will replace as much as possible of existing gas resources, Second if the area and/or sub-area has run out of gas resources to displace then other technologies may be reduced in order to determine the maximum battery charging limit.
3) Effectiveness factors are assumed not to be a factor. Battery storage is assumed to be installed at the same sites where resources are displaced or assumed to have the same effectiveness factors.
4) Deliverability of incremental storage capacity is not evaluated. It is assumed battery storage will take over deliverability from old resources through repower. Any new battery storage resource needs to go through the generation interconnection process in order to receive deliverability and it is not evaluated in this study. CAISO cannot guaranty that there is enough deliverability available for new resources. New transmission upgrades may be required in order to make such new resources deliverable to the aggregate of load.
5) Includes battery storage charging/discharging efficiency of 85%.

6) Daily charging required is distributed to all non-discharging hours proportionally using delta between net load and the total load serving capability.
7) Energy required for charging, beyond the transmission capability under contingency condition, is produced by other LCR required resources within the local area and sub-area that are available for production during off-peak hours.
8) Hydro resources are considered to be available for production during off-peak hours, however these resources are energy limited themselves and based on past availability data they can have severely limited output during off-peak hours especially during late summer peaks under either normal or dry hydro years.
9) The study assumes the ability to provide perfect dispatch and the ability to enforce charging requirements for multiple contingency conditions (like N-1-1) in the day ahead time frame while the system is under normal (no contingency) conditions. CAISO software improvements and/or augmentations are required in order to achieve this goal.

Installing battery storage with insufficient characteristics (MW, MWh and duration) will not result in a one for one reduction of the local area or sub-area need for other types of resources. The CAISO expects that the overall RA portfolio provided by all LSEs to account for the uplift, beyond the minimum LCR need, in MWs required from other type of resources for all areas and sub-areas where LSEs have procured battery storage beyond the charging capability or with incorrect characteristics (MW, MWh and duration). If uplift is not provided the CAISO may use its back stop authority to assure that reliability standards are met throughout the day, including off-peak hours.

3. Locational Capacity Requirement Study Results

3.1 Summary of Study Results

LCR is defined as the amount of resource capacity that is needed within a Local Capacity Area to reliably serve the load located within this area. The results of the CAISO's analysis are summarized in the Executive Summary Tables.

Table 3.1-1 2027 Local Capacity Needs vs. Peak Load and Local Area Resources

	2027 Total LCR (MW)	Peak Load (1 in10) (MW)	2027 LCR as % of Peak Load	Total NQC Local Area Resources (MW)	2027 LCR as % of Total NQC
Humboldt	149	201	74%	176	85%
North Coast/North Bay	592	1488	40%	1082	55%
Sierra	1892	1923	98%	1924	98%**
Stockton	732	1049	70%	779	94%**
Greater Bay	8315	13032	64%	8513	98%**
Greater Fresno	2090	3514	59%	4186	50%**
Kern	315	1092	29%	453	70%**
Big Creek/Ventura	704	4209	17%	5428	13%
LA Basin	6823	20335	34%	11844	58%
San Diego/Imperial Valley	2006	4590	44%	6199	32%
Total*	**23618**	**51433**	**46%**	**40584**	**58%**

Table 3.1-2 2026 Local Capacity Needs vs. Peak Load and Local Area Resources

	2026 Total LCR (MW)	Peak Load (1 in10) (MW)	2026 LCR as % of Peak Load	Total Dependable Local Area Resources (MW)	2026 LCR as % of Total Area Resources
Humboldt	136	160	85%	174	78%
North Coast/North Bay	848	1465	58%	1028	82%
Sierra	1354	1853	73%	1943	70%**
Stockton	756	1027	74%	758	100%**
Greater Bay	7558	11607	65%	8506	89%**
Greater Fresno	2100	3592	58%	3839	55%**
Kern	452	971	47%	460	98%**
LA Basin	1369	4799	29%	5106	27%
Big Creek/Ventura	5812	19726	29%	10776	54%
San Diego/Imperial Valley	2631	4782	55%	6139	43%
Total*	**23016**	**49982**	**46%**	**38729**	**59%**

* Value shown only illustrative, since each local area peaks at a different time.

** Resource deficient LCA (or with sub-area that are deficient). Resource deficient area implies that in order to comply with the criteria, at summer peak, load must be shed immediately after the first contingency.

Table 3.1-1 and Table 3.1-2 shows how much of the Local Capacity Area load is dependent on local resources and how many local resources must be available in order to serve the load in those Local Capacity Areas in a manner consistent with the Reliability Criteria. These tables also indicate where new transmission projects, new resource additions or demand side management programs would be most useful in order to reduce the dependency on existing, generally older and less efficient local area resources.

The term "Qualifying Capacity" used in this report is the "Net Qualifying Capacity" ("NQC") posted on the CAISO web site at:

http://www.caiso.com/planning/Pages/ReliabilityRequirements/Default.aspx

The NQC list includes the area (if applicable) where each resource is located for units already operational. Neither the NQC list nor this report incorporates Demand Side Management programs and their related NQC. Units scheduled to become operational before June 1 of 2027 have been included in this 2027 LCT Study Report and added to the total NQC values for those respective areas (see detail write-up for each area).

Regarding the main tables up front (page 2), the first column, "August Qualifying Capacity," reflects three sets of resources. The first set is comprised of resources that would normally be expected to be on-line such as Municipal and Regulatory Must-take resources (state, federal, municipal and QFs). The second set is "market" based resources (market, net seller, wind and battery). The third set are solar resources, since they may or may not be available during the actual peak hour for the respective local area. The second column, "Capacity at Peak" identifies how much of the August Qualifying Capacity is expected to be available during the peak time for each particular local area. The third column, "YEAR LCR Need", sets forth the local capacity requirements, without the deficiencies that must be addressed, necessary to attain a service reliability level required to comply with NERC/WECC/CAISO mandatory reliability standards.

Table 3.1-3 includes estimated characteristics (MW, MWh, discharge duration) required from battery storage technology in order to seamlessly integrate in each local area and sub-area. The CAISO expects that for batteries that displace other local resource adequacy resources, the transmission capability under the most limiting contingency and the other local capacity resources must be sufficient to recharge the batteries in anticipation of the outage continuing through the night and into the next day's peak load period.

Table 3.1-3 2027 Battery Storage Characteristics Limited by Charging Capability

Area/Sub-area	Pmax MW	Energy MWh	Max. # of discharge hours	1 for 1 Replacement with 4-hour battery	Replacing mostly	Comment
Humboldt	29	117	6	29	gas	
North Coast/North Bay Overall	365	2743	11	300	geothermal	
Eagle Rock	122	682	10	25	geothermal	
Fulton	400	1898	9	175	geothermal	

Area/Sub-area	Pmax MW	Energy MWh	Max. # of discharge hours	1 for 1 Replacement with 4-hour battery	Replacing mostly	Comment
Sierra	-	-	-	-	-	Flow through
Placer	22	118	10	20	hydro	
Pease	7	42	8	6	gas	Need to be eliminated
Gold Hill-Drum	96	574	10	53	hydro	
Stockton	-	-	-	-	-	Sum of sub-areas
Lockeford	27	141	10	0	gas	Need to be eliminated
Tesla-Bellota	130	651	12	111	gas	
Greater Bay Overall	1756	7502	8	1356	gas	
Llagas	110	541	9	86	gas	
San Jose	378	1511	7	378	gas	
South Bay-Moss Landing	1081	4378	17	1051	gas	
Oakland	85	328	12	85	distillate	N/A
Greater Fresno Overall	1020	6147	10	560	hydro	
Panoche	78	676	12	24	gas	
Herndon	348	2177	10	120	hydro	
Hanford	44	331	13	16	gas	
Coalinga	13	114	11	6	solar	
Borden	60	256	9	58	gas	
Reedley	26	218	10	6	hydro	
Kern Overall	-	-	-	-	-	N/A
Westpark	37	186	8	14	gas	
Kern Power-Tevis	45	249	9	23	solar	
Kern Oil	95	636	11	25	gas	
South Kern PP	315	1829	10	120	gas	
Big Creek/Ventura Overall	704	4048	9	353	gas	
Vestal	-	-	-	-	gas	No requirements
Santa Clara	197	1369	11	54	gas	
LA Basin Overall	3396	25350	12	942	gas	
Eastern	1270	10091	12	370	gas	
Western	2126	15259	12	572	gas	
El Nido	206	1549	11	48	gas	
San Diego/Imperial Valley Overall	920	5549	10	470	gas	
San Diego	920	5549	10	470	gas	
El Cajon	-	-	-	-	-	Eliminated
Border	25	141	8	13	gas	

3.2 Summary of Zonal Needs

Based on the existing import allocation methodology, the only major 500 kV constraint not accounted for is path 26 (Midway-Vincent). Table 3.2-1 shows the total resources needed (based on the latest CEC load forecast) in each the two relevant zones, SP26 and NP26.

Table 3.2-1 Total Zonal Resource Needs

Zone	Load Forecast (MW)	18% reserves (MW)	(-) Allocated imports (MW)	(-) Maximum Path 26 Flow (MW)	Total Zonal Resource Need (MW)
SP26	27965	5034	-6934	-3750	**22315**
NP26=NP15+ZP26	21574	3883	-4018	-3000	**18439**

Where:

Load Forecast is the most recent 1 in 2 load forecast for year 2027 - based on the final adopted California Energy Demand 2025-2045 Forecast developed by the CEC; namely the CED 2025 Planning LSE and BAA Tables.

Reserve Margin is 18% the minimum CPUC approved planning reserve margin.

Allocated Imports are the actual 2026 Available Import Capability for loads in the CAISO control area numbers that are not expected to change much by 2027.

Maximum Path 26 flow The CAISO determines the maximum amount of Path 26 transfer capacity available after accounting for (1) Existing Transmission Contracts (ETCs) that serve load outside the CAISO Balancing Area[5] and (2) loop flow[6] from the maximum path 26 rating of 4000 MW (North-to-South) and 3000 MW (South-to-North).

Both NP 26 and SP 26 load forecast, import allocation and zonal results refer to the CAISO Balancing Area only, in order to be consistent with the import allocation methodology.

All resources that are counted as part of the Local Area Capacity Requirements fully count toward the Zonal Need. The local areas of San Diego, LA Basin and Big Creek/Ventura are all situated in SP26 and the remaining local areas are in NP26.

Changes compared to last year's results:

The load forecast went up in NP 26 by about 790 MW and down in SP 26 by about 120 MW. The Import Allocations have decreased by about 550 MW in SP 26 and increased by about 370 MW in NP 26. The Path 26 maximum transfer capability has not changed and is not envisioned to change in the near future.

[5] The transfer capability on Path 26 must be de-rated to accommodate ETCs on Path 26 that are used to serve load outside of the CAISO Balancing Area. These particular ETCs represent physical transmission capacity that cannot be allocated to LSEs within the CAISO Balancing Area.

[6] "Loop flow" is a phenomenon common to large electric power systems like the Western Electricity Coordinating Council. Power is scheduled to flow point-to-point on a Day-ahead and Hour-ahead basis through the CAISO. However, electric grid physics prevails and the actual power flow in real-time will differ from the pre-arranged scheduled flows. Loop flow is real, physical energy and it uses part of the available transfer capability on a path. If not accommodated, loop flow will cause overloading of lines, which can jeopardize the security and reliability of the grid.

3.3 Summary of Results by Local Area

Each Local Capacity Area's overall requirement is determined by also achieving each sub-area requirement. Because these areas are a part of the interconnected electric system, the total for each Local Capacity Area is not simply a summation of the sub-area needs. For example, some sub-areas may overlap and therefore the same units may count for meeting the needs in both sub-areas.

3.3.1 Humboldt Area

3.3.1.1 *Area Definition*

The transmission tie lines into the area include:

Bridgeville-Cottonwood 115 kV line #1

Humboldt-Trinity 115 kV line #1

Laytonville-Garberville 60 kV line #1

Trinity-Maple Creek 60 kV line #1

The substations that delineate the Humboldt Area are:

Bridgeville is in, Low Gap, Wildwood and Cottonwood are out

Humboldt is in, Trinity is out

Kekawaka and Garberville are in, Laytonville is out

Maple Creek is in, Trinity and Ridge Cabin are out

Humboldt LCR Area Diagram

Figure 3.3-1 Humboldt LCR Area

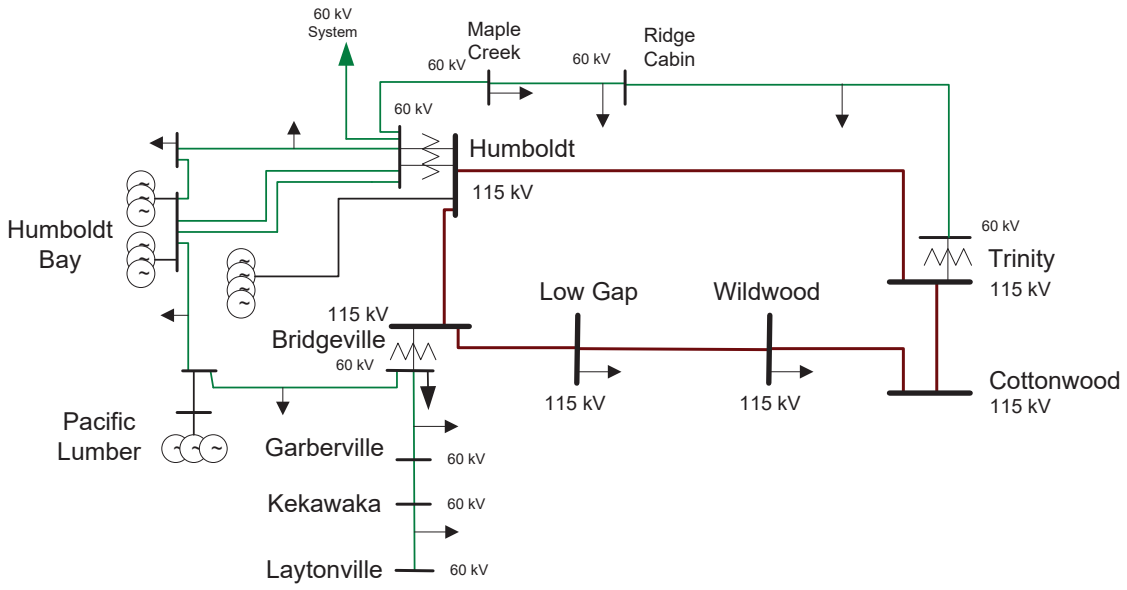

Humboldt LCR Area Load and Resources

Table 3.3-1 provides the forecasted load and resources. The list of generators within the LCR area are provided in Attachment A.

In year 2027 the estimated time of local area peak is 19:00 PM.

This area does not contain models of solar resources capable of providing resource adequacy.

If required, all non-solar technology type resources are dispatched at NQC.

Table 3.3-1 Humboldt LCR Area 2027 Forecast Load and Resources

Load (MW)		**Generation (MW)**	**Aug NQC**	**At Peak**
Gross Load	190	Market /Net Seller	176	176
AAEE	0	Battery	0	0
Behind the meter DG	0	MUNI/QF	0	0
Net Load	**190**	Solar	0	0
Transmission Losses	11	Existing 20-minute Demand Response	0	0
Pumps	0	Mothballed	0	0
Load + Losses + Pumps	**201**	**Total**	**176**	**176**

Humboldt LCR Area Hourly Profiles

Figure 3.3-2 illustrates the forecast 2027 profile for the peak day for the Humboldt LCR area with the Category P6 transmission capability without resources. Figure 3.3-3 illustrates the forecast 2027 hourly profile for Humboldt LCR area with the Category P6 transmission capability without resources.

Figure 3.3-2 Humboldt area 2027 Peak Day Forecast Profiles

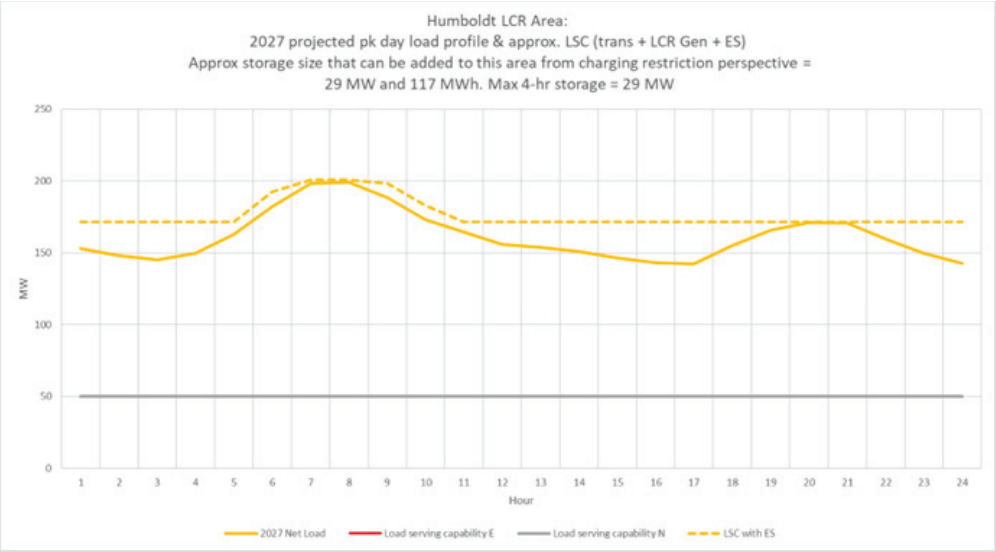

Figure 3.3-3 Humboldt area 2027 Forecast Hourly Profiles

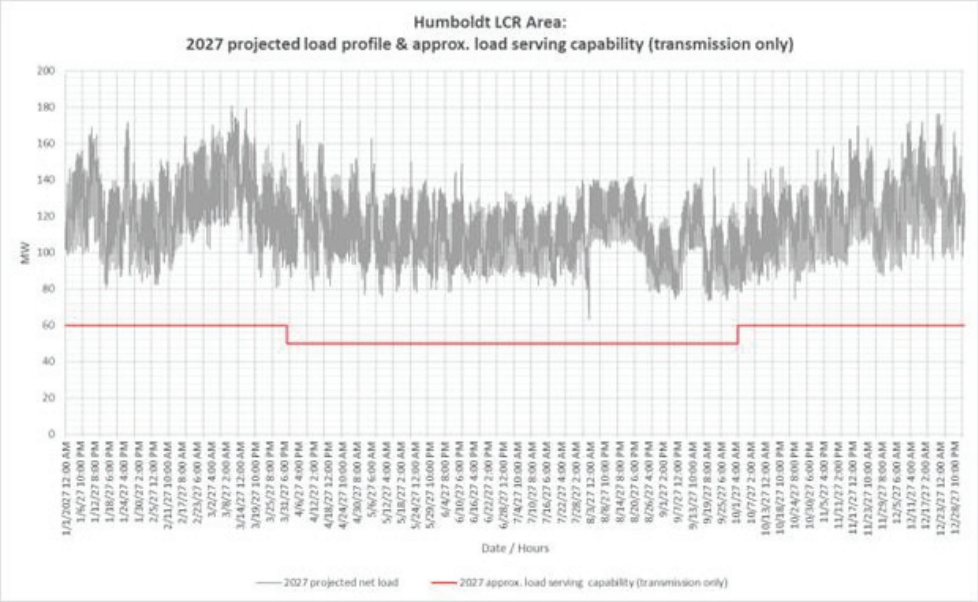

Approved transmission projects included in base cases

None

3.3.1.2 *Humboldt Overall LCR Requirement*

Table 3.3-2 identifies the area LCR requirements. The LCR requirement for Category P6 contingency is 149 MW.

Table 3.3-2 Humboldt LCR Area Requirements

Year	Limit	Category	Limiting Facility	Contingency	LCR (MW) (Deficiency)
2027	First Limit	P6	Humboldt-Trinity 115 kV	Cottonwood-Bridgeville 115 kV & Humboldt - Humboldt Bay 115 kV	149

Effectiveness factors

For most helpful procurement information please read procedure 2210Z Effectiveness Factors under 7110 posted at: http://www.caiso.com/Documents/2210Z.pdf

Changes compared to last year's results

Compared with 2026, the load forecast has increased by 41 MW and the total LCR has increased by 13 MW mostly due to load forecast increase.

3.3.2 North Coast / North Bay Area

3.3.2.1 *Area Definition*

The transmission tie facilities coming into the North Coast/North Bay area are:

Cortina-Mendocino 115 kV Line

Cortina-Eagle Rock 115 kV Line

Willits-Garberville 60 kV line #1

Vaca Dixon-Lakeville 230 kV line #1

Tulucay-Vaca Dixon 230 kV line #1

Lakeville-Sobrante 230 kV line #1

Ignacio-Sobrante 230 kV line #1

The substations that delineate the North Coast/North Bay area are:

Cortina is out, Mendocino and Indian Valley are in

Cortina is out, Eagle Rock, Highlands and Homestake are in

Willits and Lytonville are in, Kekawaka and Garberville are out

Vaca Dixon is out, Lakeville is in

Tulucay is in, Vaca Dixon is out

Lakeville is in, Sobrante is out

Ignacio is in, Sobrante and Crocket are out

North Coast and North Bay LCR Area Diagram

Figure 3.3-4 North Coast and North Bay LCR Area

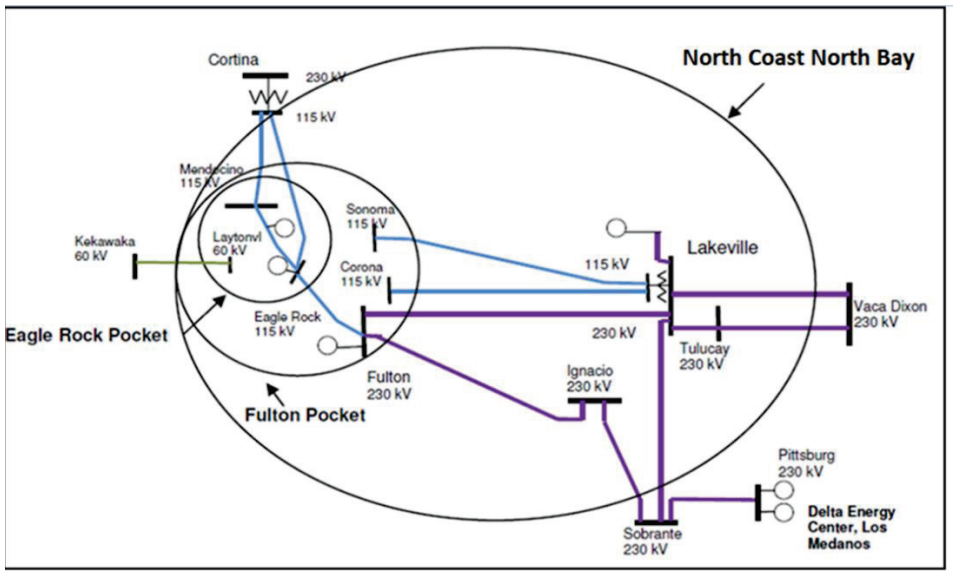

North Coast and North Bay LCR Area Load and Resources

Table 3.3-3 provides the forecasted load and resources. The list of generators within the LCR area are provided in Attachment A.

In year 2027 the estimated time of local area peak is 17:50 PM.

This area does not contain models of solar resources capable of providing resource adequacy.

If required, all non-solar technology type resources are dispatched at NQC.

Table 3.3-3 North Coast and North Bay LCR Area 2027 Forecast Load and Resources

Load (MW)		**Generation (MW)**	**Aug NQC**	**At Peak**
Gross Load	1488	Market/Net Seller	896	896
AAEE	-19	Battery	38	38
Behind the meter DG	-75	MUNI/QF	136	136
Net Load	**1445**	Solar	0	0
Transmission Losses	43	Existing 20-minute Demand Response	12	12
Pumps	0	Mothballed	0	0
Load + Losses + Pumps	**1488**	**Total**	**1082**	**1082**

North Coast and North Bay LCR Area Hourly Profiles

Figure 3.3-5 illustrates the forecast 2027 profile for the peak day for the North Coast North Bay LCR sub-area with the Category P3 normal and emergengy load serving capabilities without local resources. The chart also includes an estimated amount of energy storage that can be added to this local area from charging restriction perspective. Figure 3.3-6 illustrates the forecast 2027 hourly profile for North Coast North Bay LCR sub-area with the Category P3 emergency load serving capability without local resources.

Figure 3.3-5 North Coast and North Bay area 2027 Peak Day Forecast Profiles

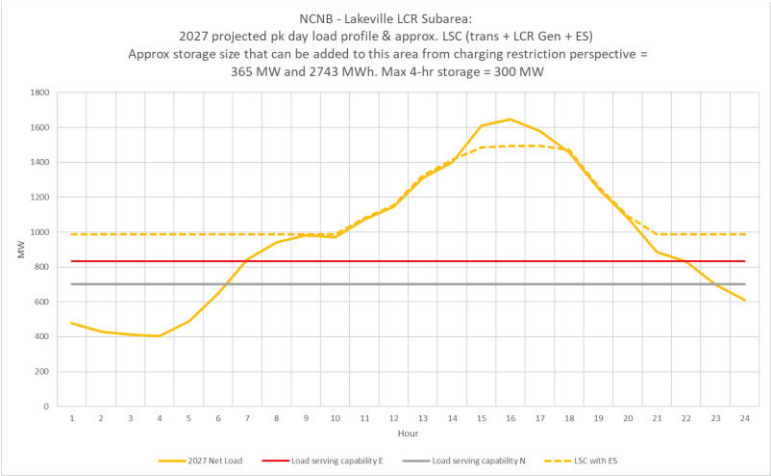

Figure 3.3-6 North Coast and North Bay area 2027 Forecast Hourly Profiles

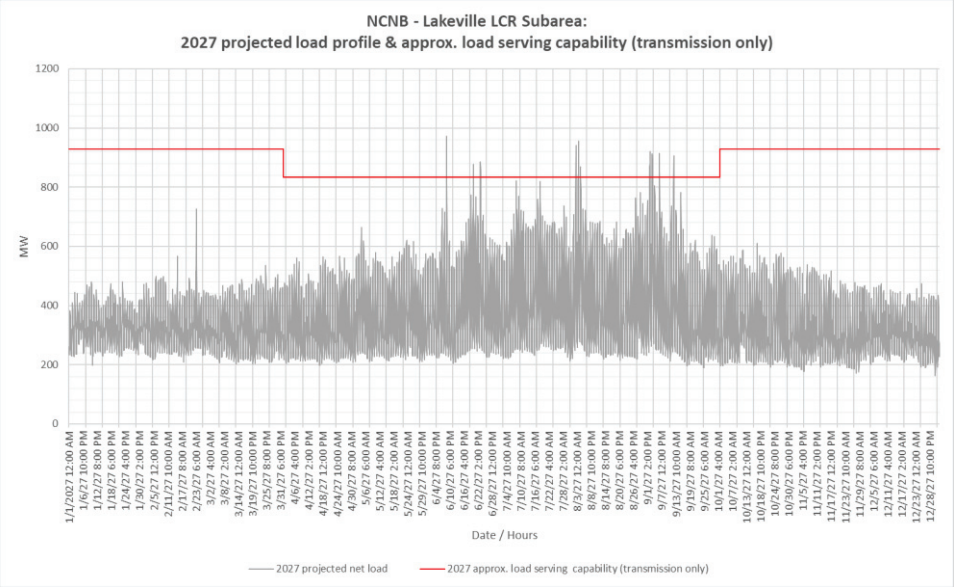

Approved transmission projects modeled in base cases

None.

3.3.2.2 *Eagle Rock LCR Sub-area*

Eagle Rock is a Sub-area of the North Coast and North Bay LCR Area.

Eagle Rock LCR Sub-area Diagram

Figure 3.3-7 Eagle Rock LCR Sub-area

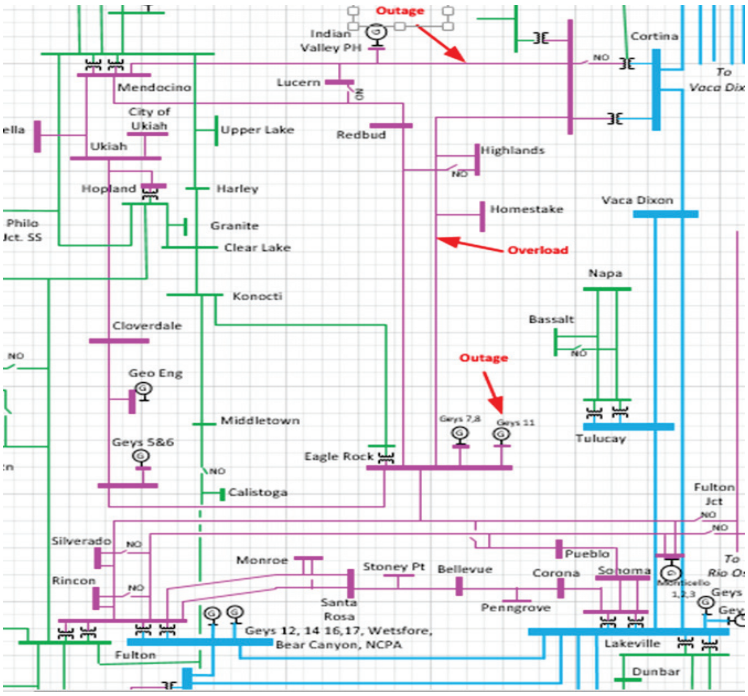

Eagle Rock LCR sub-area Load and Resources

Table 3.3-4 provides the forecasted load and resources. The list of generators within the LCR sub-area are provided in Attachment A.

Table 3.3-4 Eagle Rock LCR Sub-area 2027 Forecast Load and Resources

Load (MW)		Generation (MW)	Aug NQC	At Peak
Gross Load	266	Market/Net Seller	332	332
AAEE	-3	Battery	0	0
Behind the meter DG	-8	MUNI/QF	2	2
Net Load	**255**	Solar	0	0
Transmission Losses	15	Existing 20-minute Demand Response	0	0
Pumps	0	Mothballed	0	0
Load + Losses + Pumps	**270**	**Total**	**334**	**334**

Eagle Rock LCR Sub-area Hourly Profiles

Figure 3.3-8 illustrates the forecast 2027 profile for the peak day for the Eagle Rock LCR sub-area with the Category P3 normal and emergengy load serving capabilities without local resources. The chart also includes an estimated amount of energy storage that can be added to this local area from charging restriction perspective. Figure 3.3-9 illustrates the forecast 2027 hourly profile for Eagle Rock LCR sub-area with the Category P3 emergency load serving capability without local resources.

Figure 3.3-8 Eagle Rock LCR Sub-area 2027 Peak Day Forecast Profiles

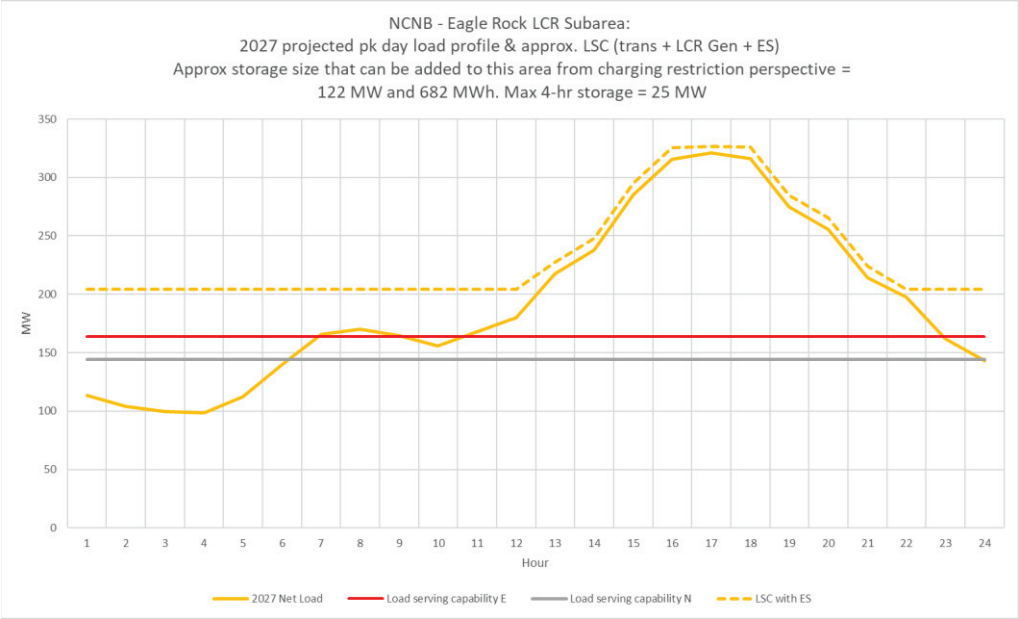

Figure 3.3-9 Eagle Rock LCR Sub-area 2027 Forecast Hourly Profiles

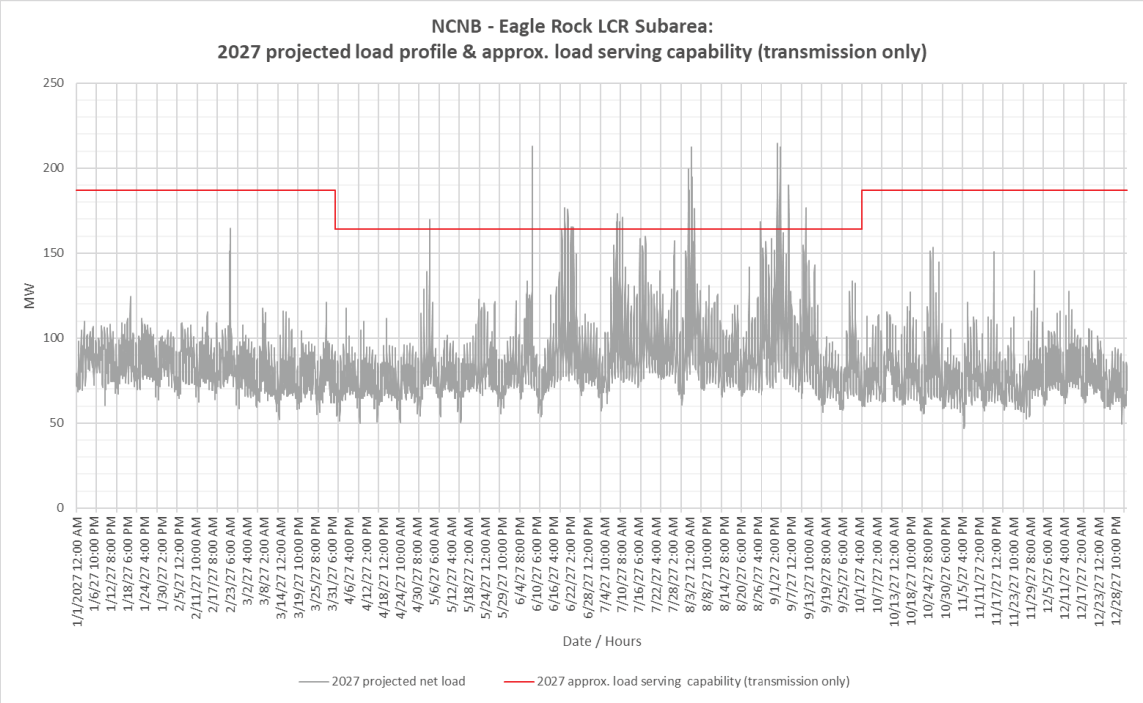

Eagle Rock LCR Sub-area Requirement

Table 3.3-5 identifies the sub-area LCR requirements. The LCR requirement for Category P3 contingency is 203 MW.

Table 3.3-5 Eagle Rock LCR Sub-area Requirements

Year	Limit	Category	Limiting Facility	Contingency	LCR (MW) (Deficiency)
2027	First Limit	P3	Eagle Rock-Cortina 115 kV line	Cortina-Mendocino 115 kV with Geyser #11 unit out	203

Effectiveness factors

Effective factors for generators in the Eagle Rock LCR sub-area are in Attachment B table titled Eagle Rock.

For most helpful procurement information please read procedure 2210Z Effectiveness Factors under 7120 posted at: http://www.caiso.com/Documents/2210Z.pdf

3.3.2.3 *Fulton Sub-area*

Fulton is a sub-area of the North Coast and North Bay LCR area.

Fulton LCR Sub-area Diagram

Figure 3.3-10 Fulton LCR Sub-area

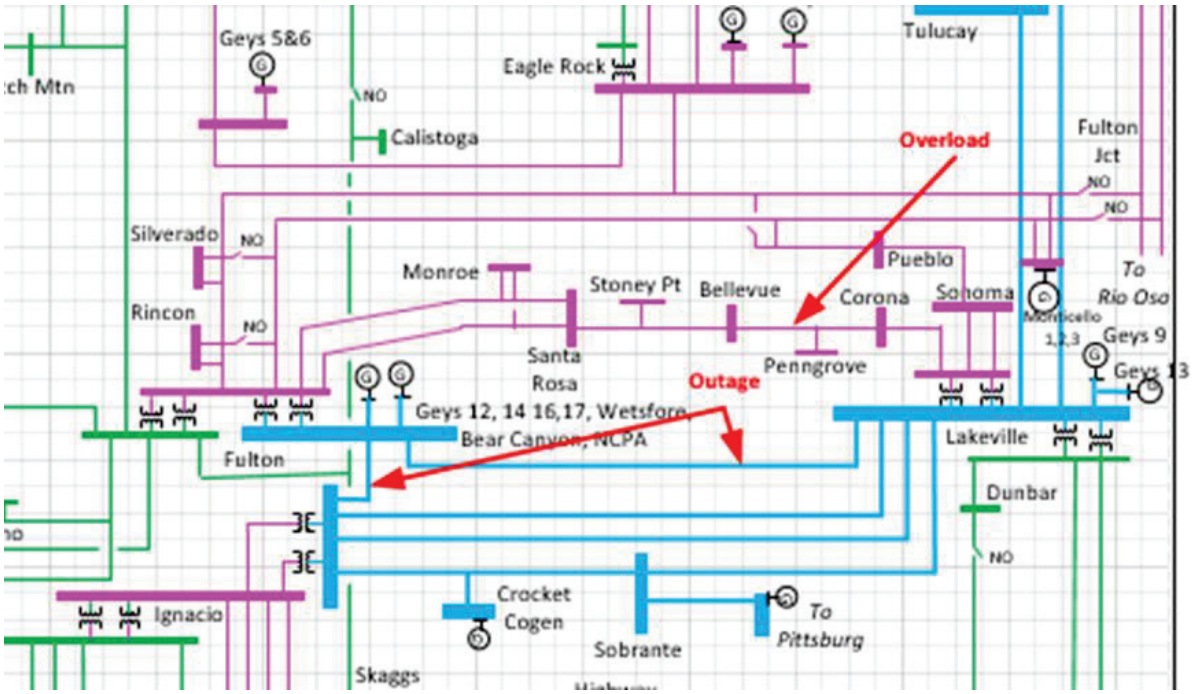

Fulton LCR Sub-area Load and Resources

Table 3.3-6 provides the forecasted load and resources. The list of generators within the LCR sub-area are provided in Attachment A.

Table 3.3-6 Fulton LCR Area 2027 Forecast Load and Resources

Load (MW)		**Generation (MW)**	**Aug NQC**	**At Peak**
Gross Load	898	Market/Net Seller	598	598
AAEE	-11	Battery	38	38
Behind the meter DG	-41	MUNI/QF	57	57
Net Load	**846**	Solar	0	0
Transmission Losses	35	Existing 20-minute Demand Response	0	0
Pumps	0	Mothballed	0	0
Load + Losses + Pumps	**881**	**Total**	**693**	**693**

Fulton LCR Sub-area Hourly Profiles

Figure 3.3-11 illustrates the forecast 2027 profile for the peak day for the Fulton LCR sub-area with the Category P6 normal and emergengy load serving capabilities without local resources. The chart also includes an estimated amount of energy storage that can be added to this local

area from charging restriction perspective. Figure 3.3-12 illustrates the forecast 2027 hourly profile for Fulton LCR sub-area with the Category P6 emergency load serving capability without local resources.

Figure 3.3-11 Fulton LCR Sub-area 2027 Peak Day Forecast Profiles

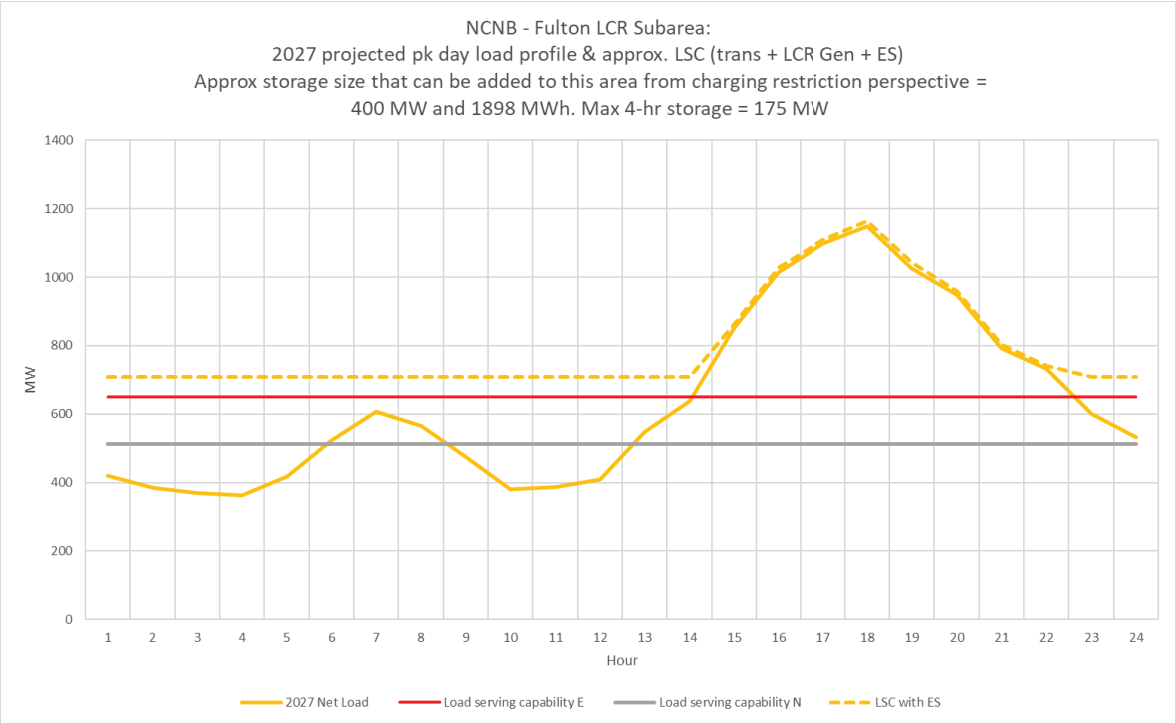

Figure 3.3-12 Fulton LCR Sub-area 2027 Forecast Hourly Profiles

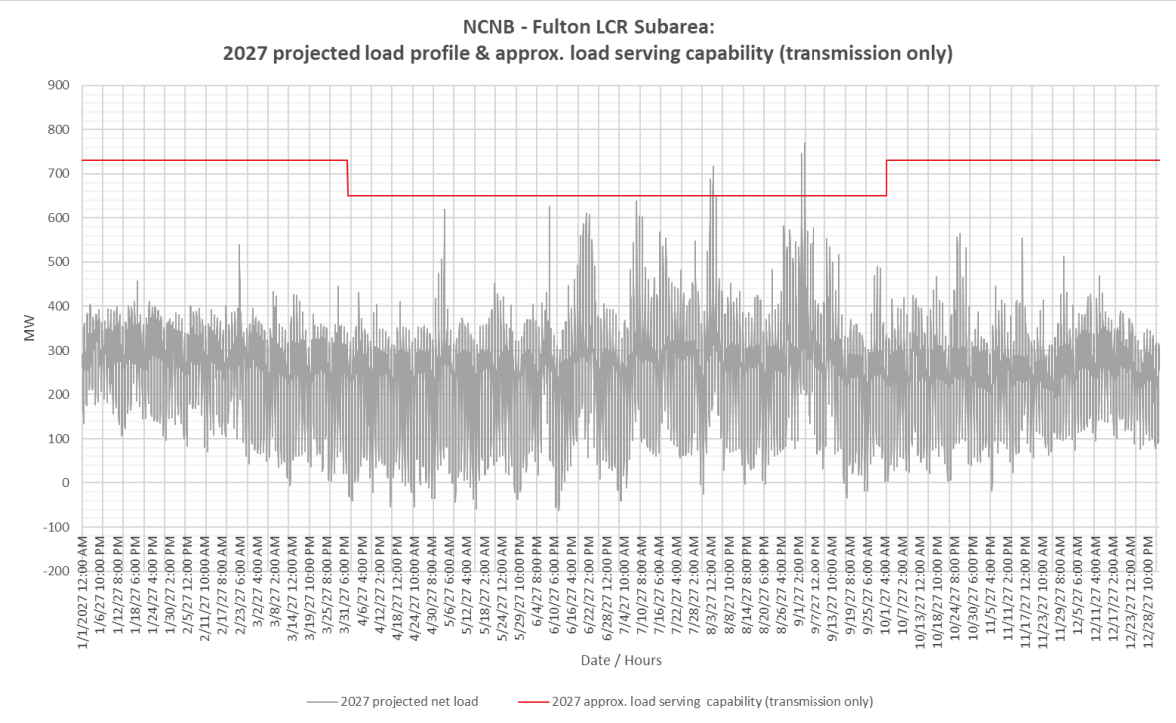

Fulton LCR Sub-area Requirement

Table 3.3-7 identifies the sub-area LCR requirements. The LCR requirement for Category P6 contingency is 391 MW.

Table 3.3-7 Fulton LCR Sub-area Requirements

Year	Limit	Category	Limiting Facility	Contingency	LCR (MW) (Deficiency)
2027	First Limit	P6	Thermal overload on Lakeville-Corona 115 kV Line	Fulton-Lakeville #1 230 kV & Fulton-Ignacio #1 230 kV	391

Effectiveness factors

For most helpful procurement information please read procedure 2210Z Effectiveness Factors under 7120 posted at: http://www.caiso.com/Documents/2210Z.pdf

3.3.2.4 *North Coast and North Bay Overall*

North Coast and North Bay Overall Requirement

Table 3.3-8 identifies the sub-area LCR requirements. The LCR requirement for Category P3 contingency is 592 MW.

Table 3.3-8 North Coast and North Bay LCR area Requirements

Year	Limit	Category	Limiting Facility	Contingency	LCR (MW) (Deficiency)
2027	First Limit	P6	Eagle Rock-Cortina 115 kV line	Vaca Dixon-Tulucay 230 kV and Cortina-Mendocino 115 kV lines	592

Effectiveness factors

Effective factors for generators in the North Coast and North Bay LCR area are in Attachment B table titled North Coast and North Bay.

Changes compared to last year's results

Compared to 2026 load forecast increased up by 23 MW and the total LCR need decreased by 256 MW due to higher generation requirements in the Ames/Pittsburg/Oakland sub-area of the Bay Area.

3.3.3 Sierra Area

3.3.3.1 *Area Definition*

The transmission tie lines into the Sierra Area are:

Table Mountain-Rio Oso 230 kV line

Table Mountain-Palermo 230 kV line

Table Mt-Pease 60 kV line

Caribou-Palermo 115 kV line

Drum-Summit 115 kV line #1

Drum-Summit 115 kV line #2

Spaulding-Summit 60 kV line

Brighton-Bellota 230 kV line

Rio Oso-Lockeford 230 kV line

Gold Hill-Eight Mile Road 230 kV line

Lodi-Eight Mile Road 230 kV line

Gold Hill-Lake 230 kV line

The substations that delineate the Sierra Area are:

Table Mountain is out Rio Oso is in

Table Mountain is out Palermo is in

Table Mt is out Pease is in

Caribou is out Palermo is in

Drum is in Summit Metering Station is out

Drum is in Summit Metering Station is out

Spaulding, Tamarak and Summit (PG&E) are in Summit Metering Station is out

Brighton is in Bellota is out

Rio Oso is in Lockeford is out

Gold Hill is in Eight Mile is out

Lodi is in Eight Mile is out

Gold Hill is in Lake is out

Sierra LCR Area Diagram

Figure 3.3-13 Sierra LCR Area

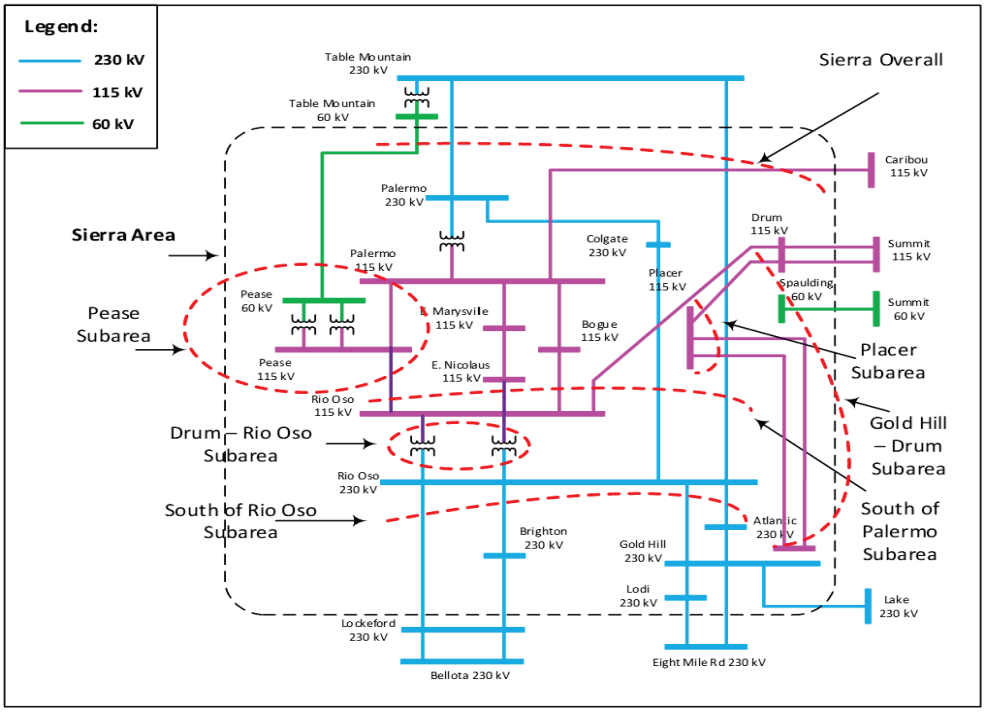

Sierra LCR Area Load and Resources

Table 3.3-9 provides the forecasted load and resources. The list of generators within the LCR area are provided in Attachment A.

In year 2027 the estimated time of local area peak is 19:10 PM.

At the local area peak time the estimated, ISO metered, solar output is 2.00%.

If required, all non-solar technology type resources are dispatched at NQC.

Table 3.3-9 Sierra LCR Area 2027 Forecast Load and Resources

Load (MW)		**Generation (MW)**	**Aug NQC**	**At Peak**
Gross Load	1984	Market/Net Seller	682	682
AAEE	-27	Battery	5	5
Behind the meter DG	-108	MUNI/QF	1237	1237
Net Load	**1849**	Solar	0	0
Transmission Losses	74	Existing 20-minute Demand Response	0	0
Pumps	0	Mothballed	0	0
Load + Losses + Pumps	**1923**	**Total**	**1924**	**1924**

Approved transmission projects modeled:

Rio Oso 230/115 kV transformer upgrade

3.3.3.2 *Placer Sub-area*

Placer is sub-area of the Sierra LCR area.

Placer LCR Sub-area Diagram

Figure 3.3-14 Placer LCR Sub-area

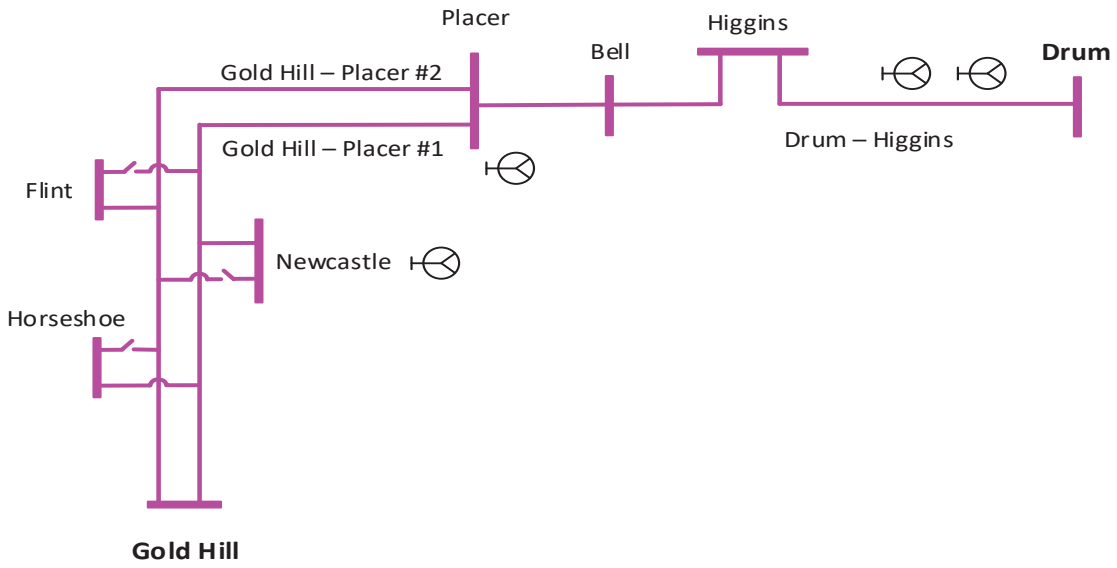

Placer LCR Sub-area Load and Resources

Table 3.3-10 provides the forecasted load and resources. The list of generators within the LCR sub-area are provided in Attachment A.

Table 3.3-10 Placer LCR Sub-area 2027 Forecast Load and Resources

Load (MW)		**Generation (MW)**	**Aug NQC**	**At Peak**
Gross Load	224	Market/Net Seller	36	36
AAEE	-3	Battery	0	0
Behind the meter DG	-12	MUNI/QF	28	28
Net Load	**209**	Solar	0	0
Transmission Losses	5	Existing 20-minute Demand Response	0	0
Pumps	0	Mothballed	0	0
Load + Losses + Pumps	**214**	**Total**	64	64

Placer LCR Sub-area Hourly Profiles

Figure 3.3-15 illustrates the forecast 2027 profile for the peak day for the Placer sub-area with the Category P6 normal and emergency load serving capabilities without local resources. The chart also includes an estimated amount of energy storage that can be added to this local area. Figure 3.3-16 illustrates the forecast 2027 hourly profile for Placer sub-area with the Category P6 emergency load serving capability without local resources.

Figure 3.3-15 Placer LCR Sub-area 2027 Peak Day Forecast Profiles

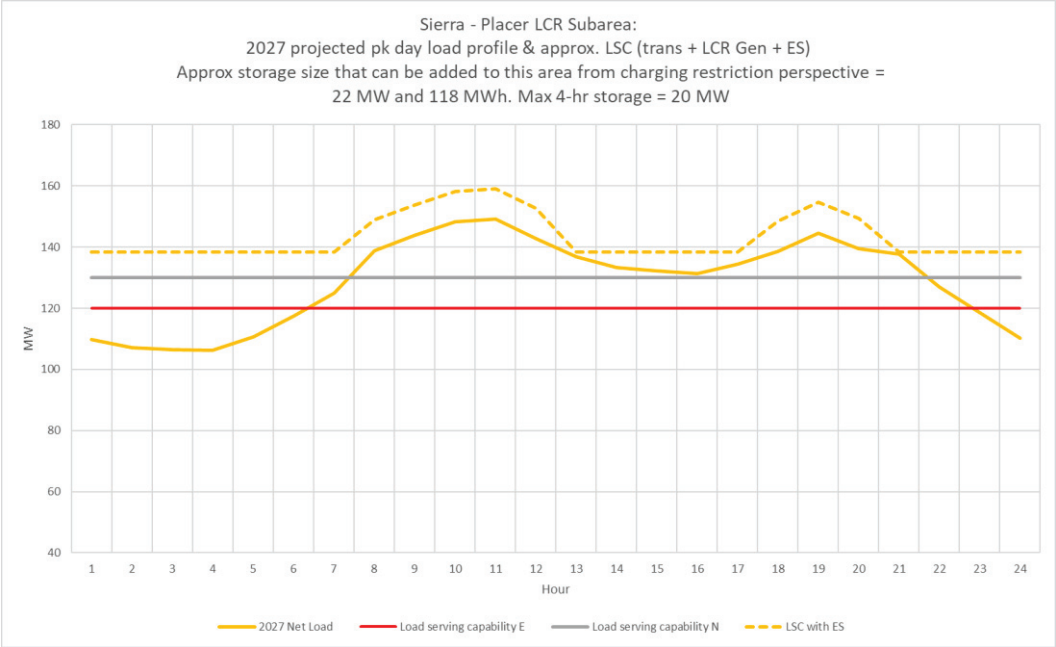

Figure 3.3-16 Placer LCR Sub-area 2027 Forecast Hourly Profiles

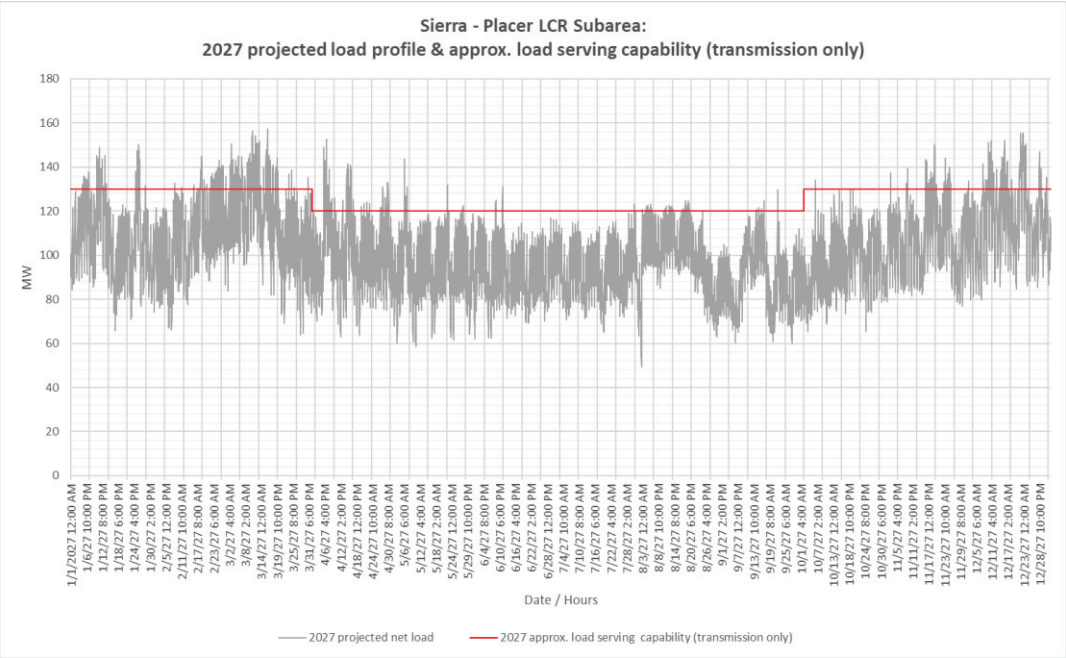

Placer LCR Sub-area Requirement

Table 3.3-11 identifies the sub-area requirements. The Category P6 and P7 LCR requirement is 152 MW including 88 MW of NQC and peak deficiencies.

Table 3.3-11 Placer LCR Sub-area Requirements

Year	Limit	Category	Limiting Facility	Contingency	LCR (MW) (Deficiency)
2027	First Limit	P6, P7	Drum–Higgins 115 kV	Gold Hill-Placer #1 115 kV & Gold Hill-Placer #2 115 kV	152 (88)

Effectiveness factors

All units within the Placer Sub-area have the same effectiveness factor.

For most helpful procurement information please read procedure 2210Z Effectiveness Factors under 7240 posted at: http://www.caiso.com/Documents/2210Z.pdf

3.3.3.3 *Pease Sub-area*

Pease is sub-area of the Sierra LCR area.

Pease LCR Sub-area Diagram

Figure 3.3-17 Pease LCR Sub-area

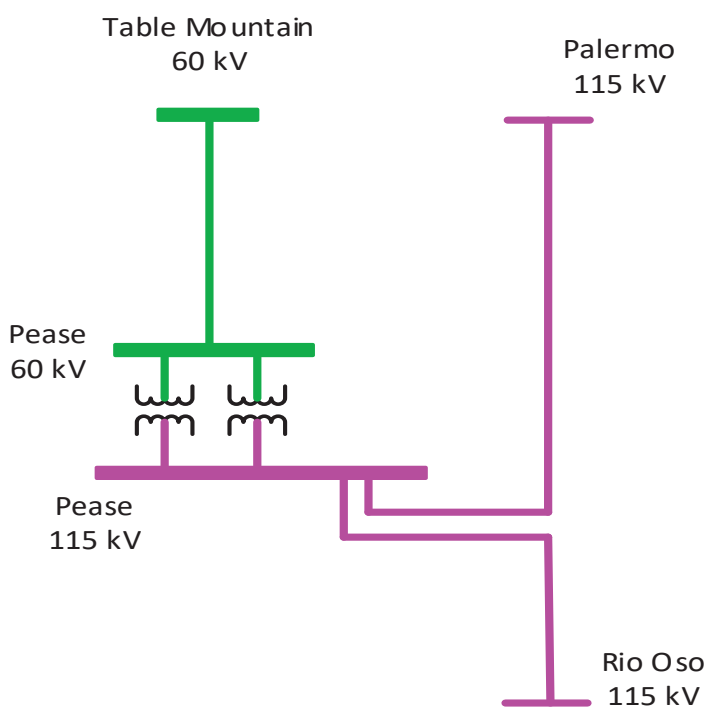

Pease LCR Sub-area Load and Resources

Table 3.3-12 provides the forecasted load and resources. The list of generators within the LCR sub-area are provided in Attachment A.

Table 3.3-12 Pease LCR Sub-area 2027 Forecast Load and Resources

Load (MW)		**Generation (MW)**	**Aug NQC**	**At Peak**
Gross Load	174	Market/Net Seller	97	97
AAEE	-2	Battery	5	5
Behind the meter DG	-10	MUNI/QF	49	49
Net Load	**161**	Solar	0	0
Transmission Losses	3	Existing 20-minute Demand Response	0	0
Pumps	0	Mothballed	0	0
Load + Losses + Pumps	**164**	**Total**	151	151

Pease LCR Sub-area Hourly Profiles

Figure 3.3-18 illustrates the forecast 2027 profile for the peak day for the Pease sub-area with the Category P6 normal and emergency load serving capabilities without local resources. The chart also includes an estimated amount of energy storage that can be added to this local area from charging restriction perspective. Figure 3.3-19 illustrates the forecast 2027 hourly profile for Pease sub-area with the Category P6 load serving capability without local resources.

Figure 3.3-18 Pease LCR Sub-area 2027 Peak Day Forecast Profiles

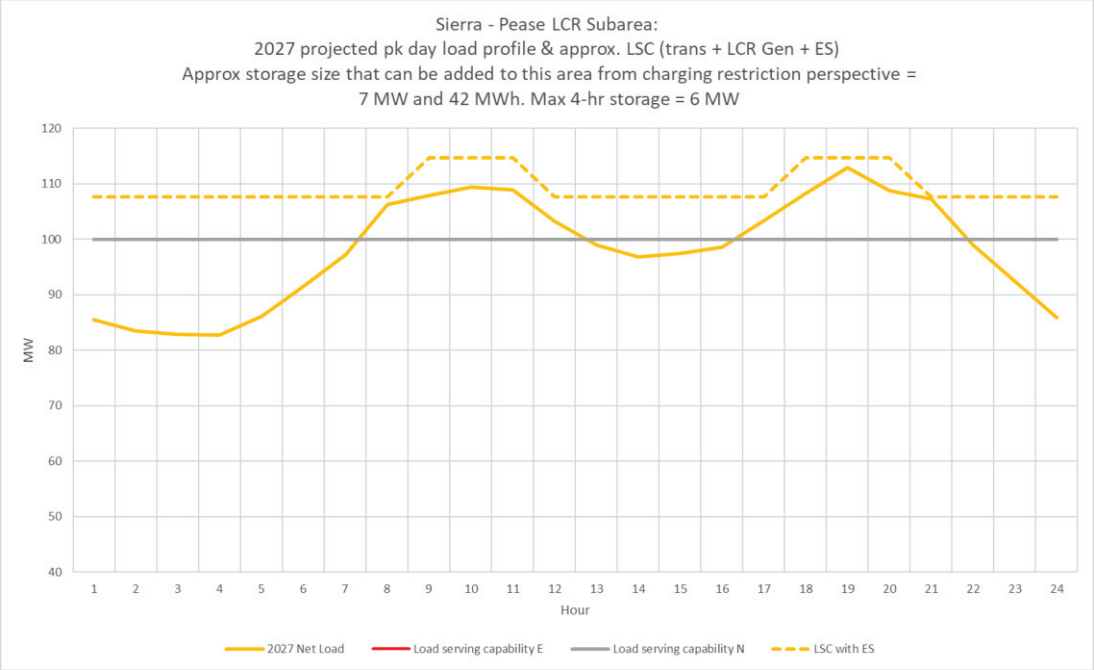

Figure 3.3-19 Pease LCR Sub-area 2027 Forecast Hourly Profiles

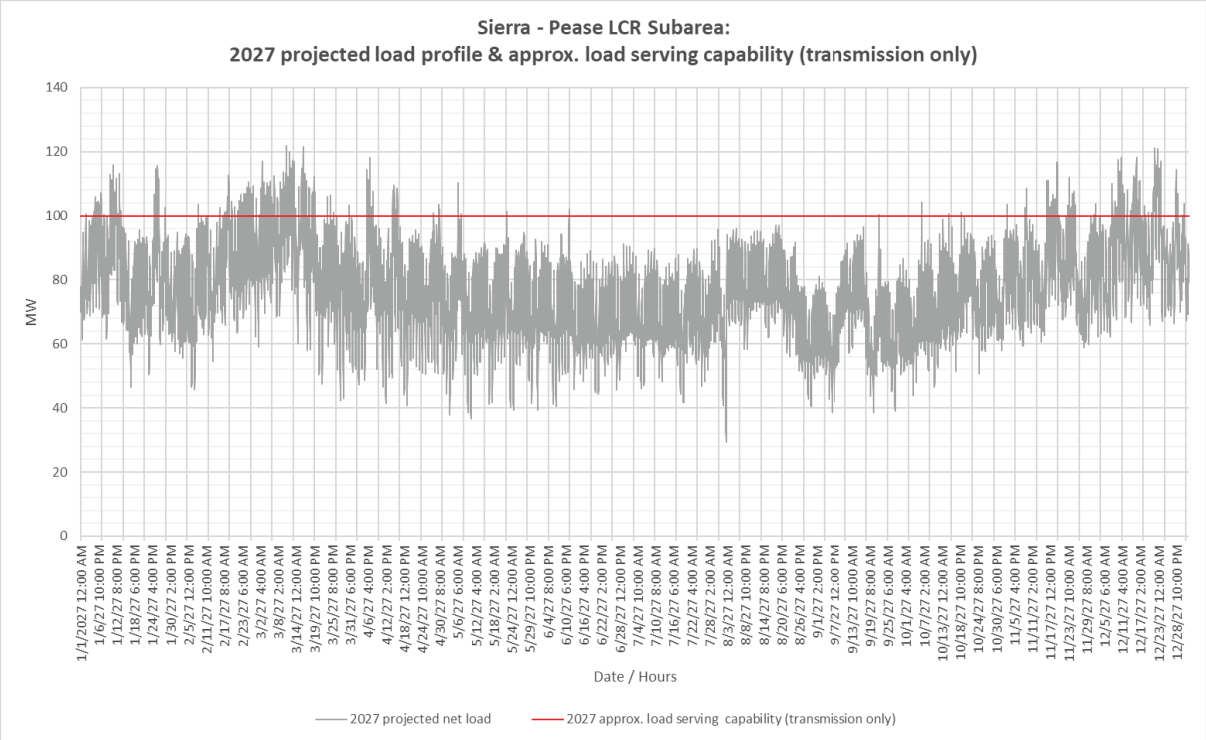

Pease LCR Sub-area Requirement

Table 3.3-13 identifies the sub-area LCR requirements. The Category P6, P7 LCR requirement is 64 MW.

Table 3.3-13 Pease LCR Sub-area Requirements

Year	Limit	Category	Limiting Facility	Contingency	LCR (MW) (Deficiency)
2027	First Limit	P6, P7	Table Mountain – Pease 60 kV	Palermo – Pease 115 kV and Pease – Rio Oso 115 kV lines	64

Effectiveness factors:

All units within the Pease sub-area have the same effectiveness factor.

For most helpful procurement information please read procedure 2210Z Effectiveness Factors under 7230 posted at: http://www.caiso.com/Documents/2210Z.pdf

3.3.3.4 *Gold Hill-Drum Sub-area*

Gold Hill-Drum is sub-area of the Sierra LCR area.

Gold Hill-Drum LCR Sub-area Diagram

Figure 3.3-20 Gold Hill-Drum LCR Sub-area

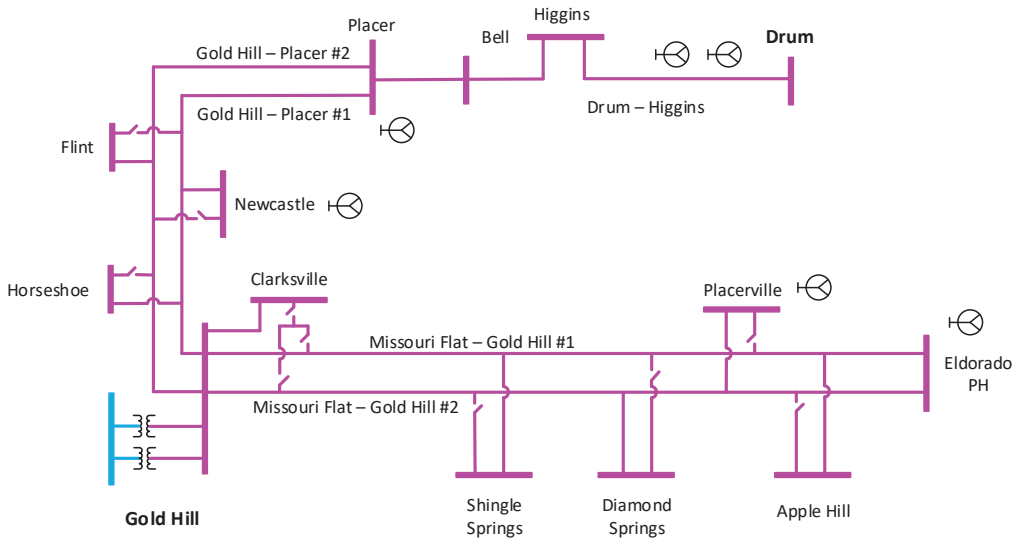

Gold Hill-Drum LCR Sub-area Load and Resources

Table 3.3-14 provides the forecasted load and resources. The list of generators within the LCR sub-area are provided in Attachment A.

Table 3.3-14 Gold Hill-Drum LCR Sub-area 2027 Forecast Load and Resources

Load (MW)		**Generation (MW)**	**Aug NQC**	**At Peak**
Gross Load	581	Market/Net Seller	52	52
AAEE	-7	Battery	0	0
Behind the meter DG	-36	MUNI/QF	28	28
Net Load	**537**	Solar	0	0
Transmission Losses	12	Existing 20-minute Demand Response	0	0
Pumps	0	Mothballed	0	0
Load + Losses + Pumps	**549**	**Total**	**80**	**80**

Gold Hill-Drum LCR Sub-area Hourly Profiles

Figure 3.3-21 illustrates the forecast 2027 profile for the peak day for the Gold Hill-Drum sub-area with the Category P6 normal and emergency load serving capabilities without local resources. The chart also includes an estimated amount of energy storage that can be added to this local area from charging restriction perspective. Figure 3.3-22 illustrates the forecast 2027 hourly profile for Gold Hill-Drum sub-area with the Category P6 load serving capability without local resources.

Figure 3.3-21 Gold Hill-Drum LCR Sub-area 2027 Peak Day Forecast Profiles

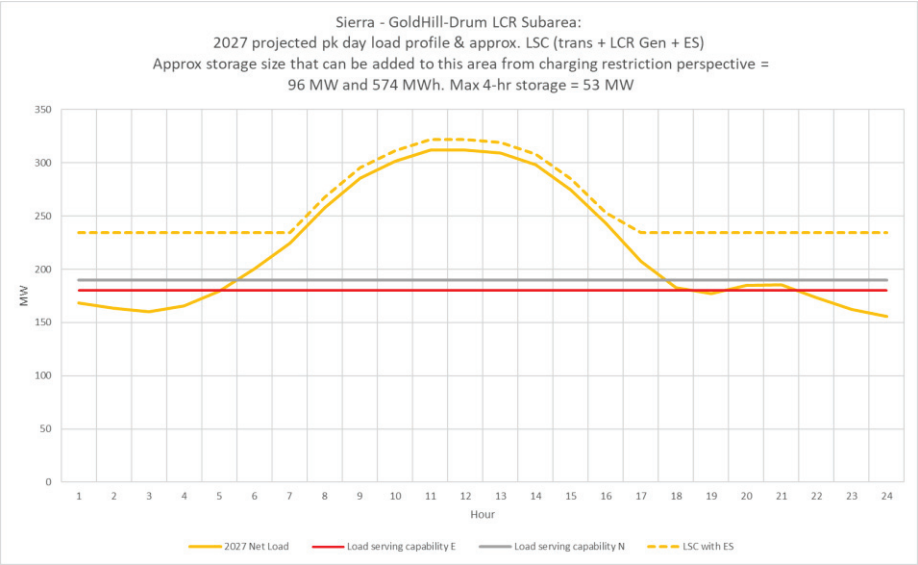

Figure 3.3-22 Gold Hill-Drum LCR Sub-area 2027 Forecast Hourly Profiles

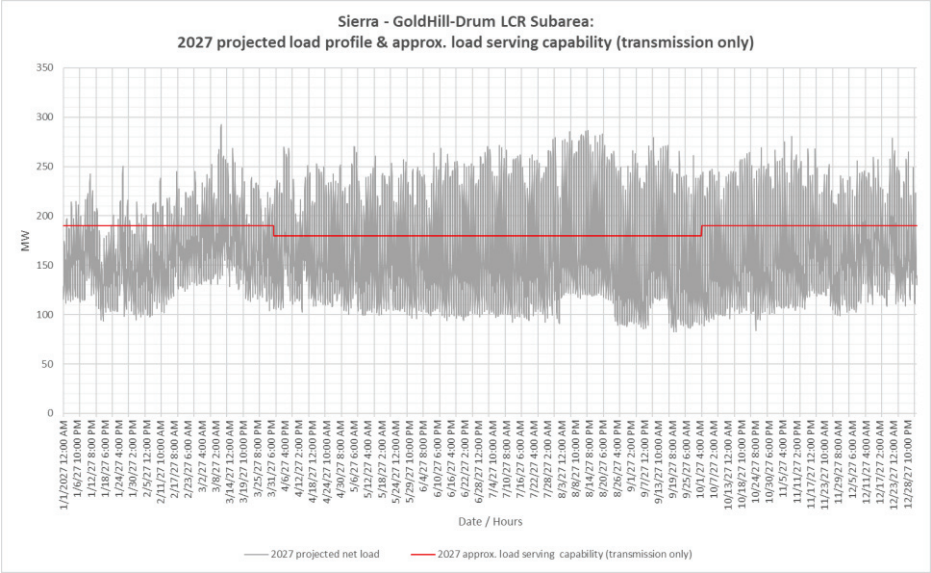

Gold Hill-Drum LCR Sub-area Requirement

Table 3.3-15 identifies the sub-area LCR requirements. The Category P6 LCR requirement is 439 MW including 359 MW of NQC and peak deficiency.

Table 3.3-15 Gold Hill-Drum LCR Sub-area Requirements

Year	Limit	Category	Limiting Facility	Contingency	LCR (MW) (Deficiency)
2027	First Limit	P6	Drum – Higgins 115 kV	Gold Hill 230/115 kV #1 and Gold Hill 230/115 kV #2 Txrs	439 (359)

Effectiveness factors:

All units within the Gold Hill-Drum Sub-area have the same effectiveness factor.

For most helpful procurement information please read procedure 2210Z Effectiveness Factors under 7230 and 7240 posted at: http://www.caiso.com/Documents/2210Z.pdf

3.3.3.5 *South of Rio Oso Sub-area*

South of Rio Oso is sub-area of the Sierra LCR area.

South of Rio Oso LCR Sub-area Diagram

Figure 3.3-23 South of Rio Oso LCR Sub-area

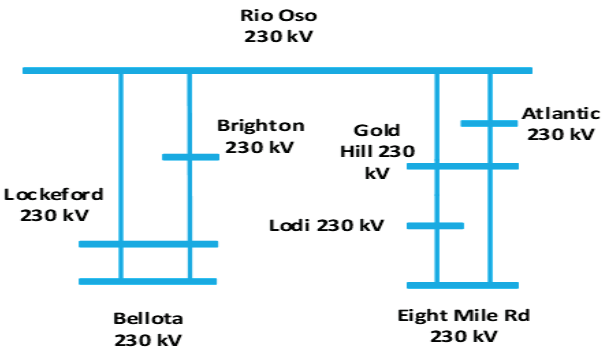

South of Rio Oso LCR Sub-area Load and Resources

The South of Rio Oso sub-area does not have a defined load pocket with the limits based upon power flow through the area. Table 3.3-16 provides the forecasted resources in the sub-area. The list of generators within the LCR area are provided in Attachment A.

Table 3.3-16 South of Rio Oso LCR Sub-area 2027 Forecast Load and Resources

Load (MW)	Generation (MW)	Aug NQC	At Peak
The South of Rio Oso Sub-area does not have a defined load pocket with the limits based upon power flow through the area.	Market/Net Seller	87	87
	Battery	0	0
	MUNI/QF	607	607
	Solar	0	0
	Existing 20-minute Demand Response	0	0
	Mothballed	0	0
	Total	**694**	**694**

South of Rio Oso LCR Sub-area Hourly Profiles

The South of Rio Oso sub-area does not have a defined load pocket with the limits based upon power flow through the area. As such, no load profile is provided for this sub-area.

South of Rio Oso LCR Sub-area Requirement

Table 3.3-17 identifies the sub-area LCR requirements. The LCR requirement for Category P6 is 690 MW.

Table 3.3-17 South of Rio Oso LCR Sub-area Requirements

Year	Limit	Category	Limiting Facility	Contingency	LCR (MW)
2027	First limit	P6	Rio Oso – Atlantic 230 kV	Rio Oso – Gold Hill 230 kV Rio Oso – Brighton 230 kV	690

Effectiveness factors:

Effective factors for generators in the South of Rio Oso LCR sub-area are in Attachment B table titled Rio Oso.

For other helpful procurement information please read procedure 2210Z Effectiveness Factors under 7230 posted at: http://www.caiso.com/Documents/2210Z.pdf

3.3.3.6 *Sierra Area Overall*

Sierra LCR Area Hourly Profiles

The Sierra LCR Area limits are based upon power flow through the area. As such, no load profile is provided for the area.

Sierra LCR Area Requirement

Table 3.3-18 identifies the area requirements. The LCR requirement for Category P6 is 1892 MW.

Table 3.3-18 Sierra LCR Area Requirements

Year	Limit	Category	Limiting Facility	Contingency	LCR (MW)
2027	First limit	P6	Table Mountain – Pease 60 kV	Table Mountain – Palermo 230 kV Table Mountain – Rio Oso 230 kV	1892

Effectiveness factors:

Effective factors for generators in the Sierra Overall LCR area are in Attachment B table titled Sierra Overall.

For other helpful procurement information please read procedure 2210Z Effectiveness Factors under 7230 and 7240 posted at: http://www.caiso.com/Documents/2210Z.pdf

Changes compared to last year's results:

The load forecast has increased by 70 MW. The total LCR requirement increased by 538 MW due to load forecast increase and due to flow-through nature of the Sierra area.

3.3.4 Stockton Area

The LCR requirement for the Stockton Area is driven by the sum of the requirements for the Tesla-Bellota and Lockeford sub-areas.

3.3.4.1 ***Area Definition***

Tesla-Bellota Sub-Area Definition

The transmission facilities that establish the boundary of the Tesla-Bellota sub-area are:

Bellota 230/115 kV Transformer #1

Bellota 230/115 kV Transformer #2

Tesla-Tracy 115 kV Line

Tesla-Salado 115 kV Line

Tesla-Salado-Manteca 115 kV line

Tesla-Schulte #1 115 kV Line

Tesla-Schulte #2 115kV line

The substations that delineate the Tesla-Bellota Sub-area are:

Bellota 230 kV is out Bellota 115 kV is in

Bellota 230 kV is out Bellota 115 kV is in

Tesla is out Tracy is in

Tesla is out Salado is in

Tesla is out Salado and Manteca are in

Tesla is out Schulte is in

Tesla is out Schulte is in

Lockeford Sub-Area Definition

The transmission facilities that establish the boundary of the Lockeford Sub-area are:

Lockeford-Industrial 60 kV line

Lockeford-Lodi #1 60 kV line

Lockeford-Lodi #2 60 kV line

Lockeford-Lodi #3 60 kV line

The substations that delineate the Lockeford Sub-area are:

Lockeford is out Industrial is in

Lockeford is out Lodi is in

Lockeford is out Lodi is in

Lockeford is out Lodi is in

Stockton LCR Area Diagram

The Stockton LCR area is comprised of the individual noncontiguous sub-areas with diagrams provided for each of the sub-areas below.

Stockton LCR Area Load and Resources

Table 3.3-19 provides the forecast load and resources in the area. The list of generators within the LCR area are provided in Attachment A.

In year 2027 the estimated time of local area peak is 19:10 PM.

At the local area peak time the estimated, ISO metered, solar output is 2.00%.

If required, all non-solar technology type resources are dispatched at NQC.

Table 3.3-19 Stockton LCR Area 2027 Forecast Load and Resources

Load (MW)		**Generation (MW)**	**Aug NQC**	**At Peak**
Gross Load	1094	Market/Net Seller	471	471
AAEE	-14	Battery	157	157
Behind the meter DG	-47	MUNI/QF	132	132
Net Load	**1033**	Solar	13	0
Transmission Losses	16	Existing 20-minute Demand Response	6	6
Pumps	0	Mothballed	0	0
Load + Losses + Pumps	**1049**	**Total**	**779**	**766**

Stockton LCR Area Hourly Profiles

The Stockton LCR area is comprised of the individual noncontiguous sub-areas with profiles provided for each of the sub-areas below.

Approved transmission projects modeled

Vierra 115 kV Looping Project

3.3.4.2 *Lockeford Sub-area*

Lockeford is a sub-area of the Stockton LCR area.

Lockeford LCR Sub-area Diagram

Figure 3.3-24 Lockeford LCR Sub-area

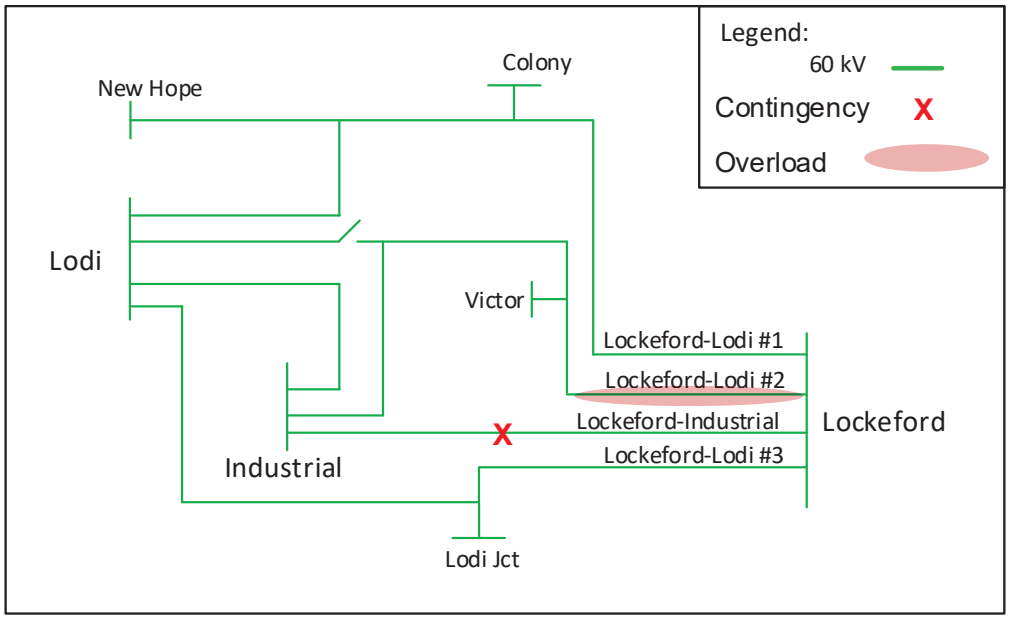

Lockeford LCR Sub-area Load and Resources

Table 3.3-20 provides the forecasted load and resources. The list of generators within the LCR Sub-area are provided in Attachment A.

Table 3.3-20 Lockeford LCR Sub-area 2027 Forecast Load and Resources

Load (MW)		**Generation (MW)**	**Aug NQC**	**At Peak**
Gross Load	199	Market	0	0
AAEE	-3	MUNI	0	0
Behind the meter DG	-2	QF	24	24
Net Load	**195**	Solar	0	0
Transmission Losses	1	Existing 20-minute Demand Response	0	0
Pumps	0	Mothballed	0	0
Load + Losses + Pumps	**196**	**Total**	**24**	**24**

Lockeford LCR Sub-area Hourly Profiles

Figure 3.3-25 illustrates the forecast 2027 profile for the peak day for the Lockeford sub-area with the Category P3 normal and emergency load serving capabilities without local resources. Figure 3.3-26 illustrates the forecast 2027 hourly profile for Lockeford sub-area with the Category P3 load serving capability without local resources.

Figure 3.3-25 Lockeford LCR Sub-area 2027 Peak Day Forecast Profiles

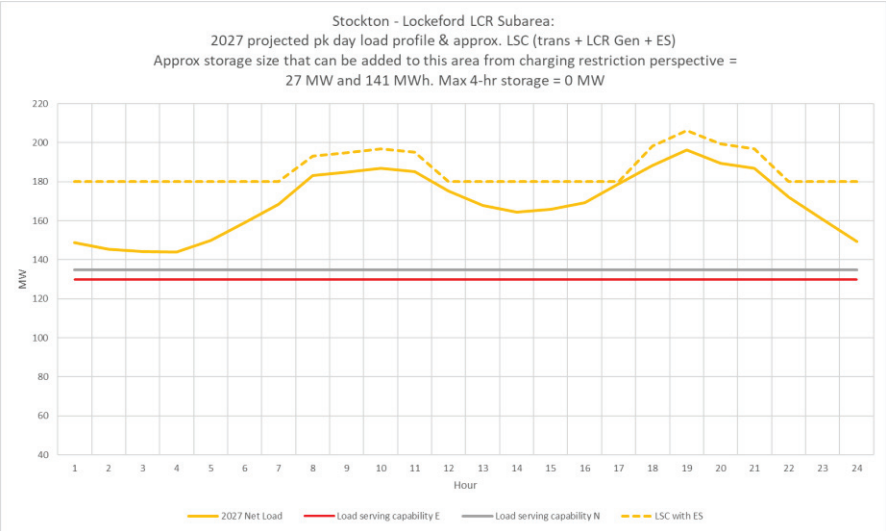

Figure 3.3-26 Lockeford LCR Sub-area 2027 Forecast Hourly Profiles

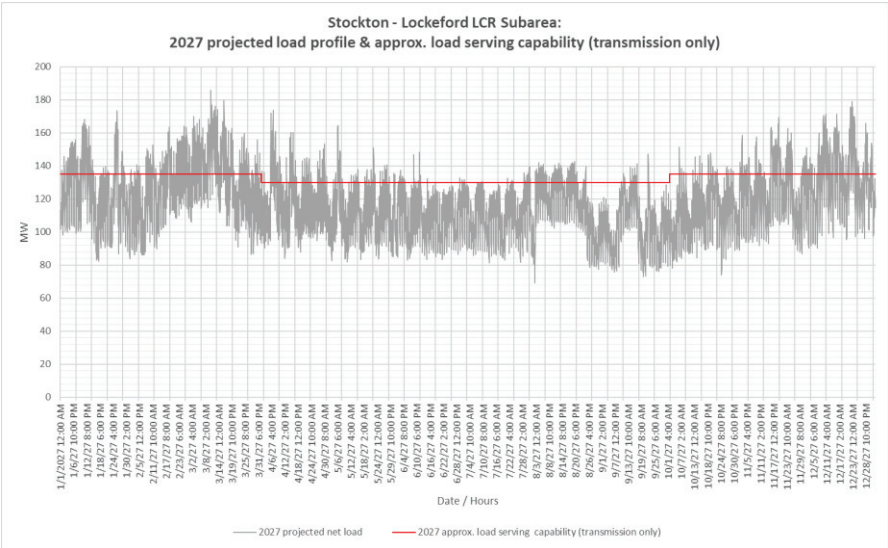

Lockeford LCR Sub-area Requirement

Table 3.3-21 identifies the sub-area requirements. The LCR requirement for for this sub-area is based on the Category P3 contingency at 48 MW including 24 MW deficiencies.

Table 3.3-21 Lockeford LCR Sub-area Requirements

Year	Limit	Category	Limiting Facility	Contingency	LCR (MW) (Deficiency)
2027	First Limit	P3	Lockeford-Lodi #2 60 kV	Lockeford-Industrial 60 kV & Lodi CT	48 (24)

Effectiveness factors:

All units are needed therefore no effectiveness factor is required.

3.3.4.3 *Stanislaus Sub-area*

Stanislaus is a sub-area within the Tesla – Bellota sub-area of the Stockton LCR area.

Stanislaus LCR Sub-area Diagram

Figure 3.3-27 Stanislaus LCR Sub-area

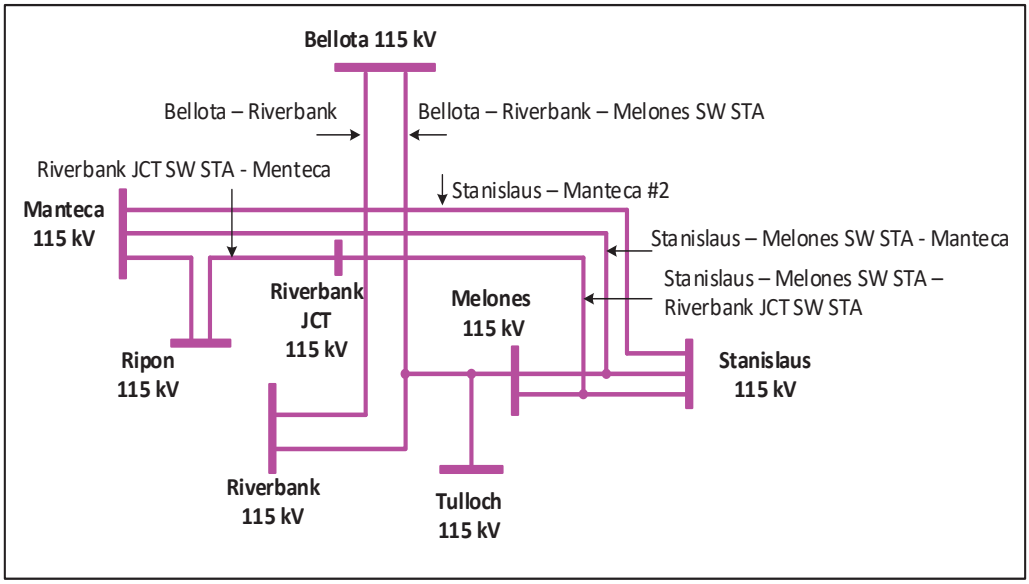

Stanislaus LCR Sub-area Load and Resources

The Stanislaus sub-area does not has a defined load pocket with the limits based upon power flow through the area. Table 3.3-22 provides the forecasted resources in the sub-area. The list of generators within the LCR sub-area are provided in Attachment A.

Table 3.3-22 Stanislaus LCR Sub-area 2027 Forecast Load and Resources

Load (MW)	Generation (MW)	Aug NQC	At Peak
The Stanislaus Sub-area does not has a defined load pocket with the limits based upon power flow through the area.	Market/Net Seller	89	89
	Battery	10	10
	MUNI/QF	88	88
	Solar	0	0
	Existing 20-minute Demand Response	0	0
	Mothballed	0	0
	Total	**187**	**187**

Stanislaus LCR Sub-area Hourly Profiles

The Stanislaus sub-area does not has a defined load pocket with the limits based upon power flow through the area. As such, no load profile is provided for this sub-area.

Stanislaus LCR Sub-area Requirement

Table 3.3-23 identifies the sub-area requirements. The LCR requirement for Category P3 contingency is 161 MW.

Table 3.3-23 Stanislaus LCR Sub-area Requirements

Year	Limit	Category	Limiting Facility	Contingency	LCR (MW) (Deficiency)
2027	First limit	P3	Manteca 115 kV – Ripon 115 kV	Bellota-Riverbank-Melones 115 kV and Stanislaus PH	161

Effectiveness factors:

All units within this sub-area have the same effectiveness factor.

For most helpful procurement information please read procedure 2210Z Effectiveness Factors under 7410 posted at: http://www.caiso.com/Documents/2210Z.pdf

3.3.4.4 *Tesla-Bellota Sub-area*

Tesla-Bellota is a sub-area of the Stockton LCR area.

Tesla-Bellota LCR Sub-area Diagram

Figure 3.3-28 Tesla-Bellota LCR Sub-area

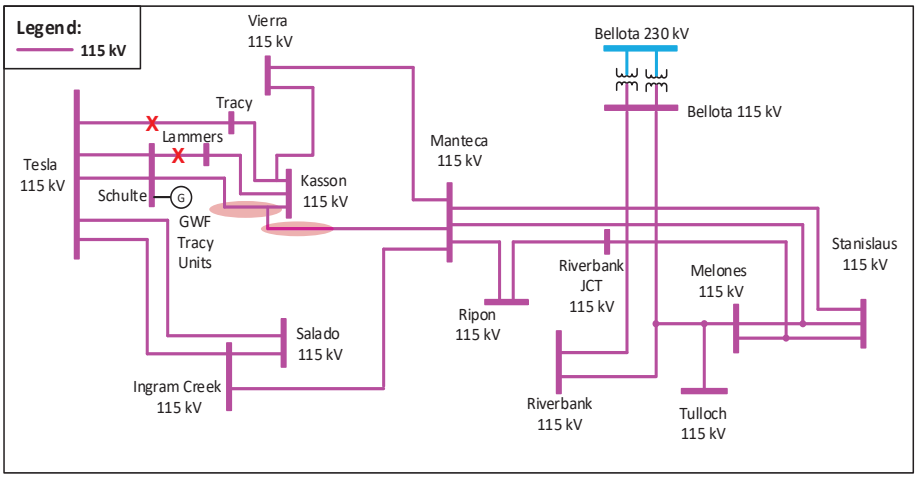

Tesla Bellota LCR Sub-area Load and Resources

Table 3.3-24 provides the forecasted load and resources. The list of generators within the LCR Sub-area are provided in Attachment A.

Table 3.3-24 Tesla-Bellota LCR Sub-area 2027 Forecast Load and Resources

Load (MW)		Generation (MW)	Aug NQC	At Peak
Gross Load	895	Market/Net Seller	471	471
AAEE	-11	Battery	157	157
Behind the meter DG	-45	MUNI/QF	108	108
Net Load	**838**	Solar	13	0
Transmission Losses	15	Existing 20-minute Demand Response	6	6
Pumps	0	Mothballed	0	0
Load + Losses + Pumps	**853**	**Total**	**755**	**742**

All of the resources needed to meet the Stanislaus sub-area count towards the Tesla-Bellota sub-area LCR need.

Tesla-Bellota LCR Sub-area Hourly Profiles

Figure 3.3-29 illustrates the forecast 2027 profile for the peak day for the Tesla-Bellota sub-area with the Category P6 normal and emergency load serving capabilities without local resources. The chart also includes an estimated amount of energy storage that can be added to this local area from charging restriction perspective. Figure 3.3-30 illustrates the forecast 2027 hourly profile for Tesla-Bellota sub-area with the Category P6 emergency load serving capability without local resources.

Figure 3.3-29 Tesla-Bellota LCR Sub-area 2027 Peak Day Forecast Profiles

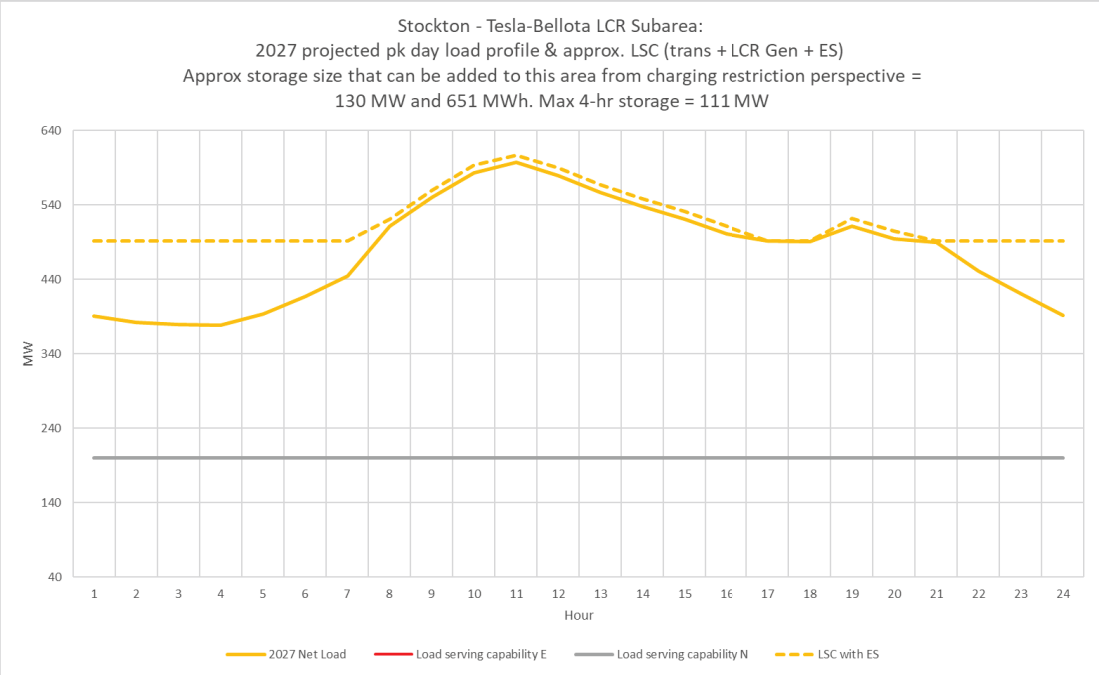

Figure 3.3-30 Tesla-Bellota LCR Sub-area 2027 Forecast Hourly Profiles

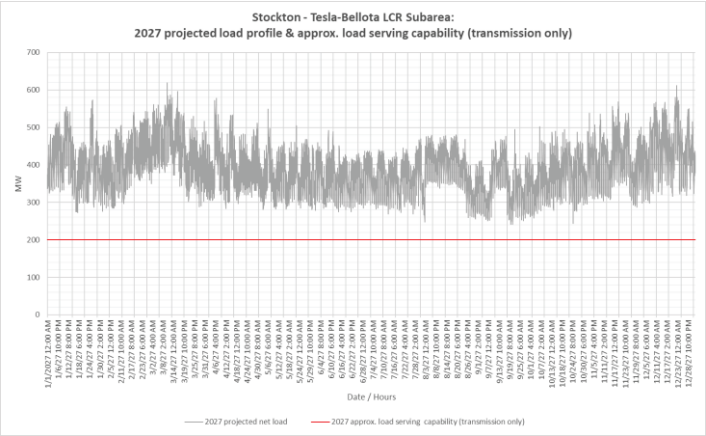

Tesla-Bellota LCR Sub-area Requirement

Table 3.3-25 identifies the sub-area requirements. The LCR requirement for Category P6 contingency is 963 MW including a 255 MW NQC and 268 MW at peak deficiency.

Table 3.3-25 Tesla-Bellota LCR Sub-area Requirements

Year	Limit	Category	Limiting Facility	Contingency	LCR (MW) (Deficiency)
2027	First limit	P2-4	Melones–Riverbank-Bellota 115 kV	Tesla 115 KV - Section 2D & 1D	576
2027	First limit	P6	Schulte-Kasson 115 kV	Schulte - Lammers 115 kV Line and Tesla - Leprino Jct 115 kV Line	628 (209 NQC, 222 Peak)
Total LCR Need for Tesla – Bellota Sub-area in 2027					917 (209 NQC, 222 Peak)

Effectiveness factors:

All units within this sub-area are needed therefore no effectiveness factor is required.

For most helpful procurement information please read procedure 2210Z Effectiveness Factors under 7410 posted at: http://www.caiso.com/Documents/2210Z.pdf

3.3.4.5 *Stockton Overall*

Stockton LCR Area Overall Requirement

The requirement for this area is driven by the sum of requirements for the Tesla-Bellota and Lockeford sub-areas. Table 3.3-26 identifies the area requirements. The LCR requirement is 1011 MW with a 279 MW NQC and 292 at peak deficiency.

Table 3.3-26 Stockton LCR Area Overall Requirements

Year	LCR (MW) (Deficiency)
2027	965 (233 NQC/ 246 Peak)

Changes compared to last year's results

The load forecast has increased by 22 MW, and the LCR need decreased by 255 MW due to new transmission projects (mainly Vierra 115 kV Looping project).

3.3.5 Greater Bay Area

3.3.5.1 *Area Definition:*

The transmission tie lines into the Greater Bay Area are:

Lakeville-Sobrante 230 kV

Ignacio-Sobrante 230 kV

Parkway-Moraga 230 kV

Bahia-Moraga 230 kV

Lambie SW Sta-Vaca Dixon 230 kV

Peabody-Contra Costa P.P. 230 kV

Tesla-Kelso 230 kV

Tesla-Delta Switching Yard 230 kV

Tesla-Pittsburg #1 230 kV

Tesla-Pittsburg #2 230 kV

Tesla-Newark #1 230 kV

Tesla-Newark #2 230 kV

Tesla-Ravenswood 230 kV

Tesla-Metcalf 500 kV

Moss Landing-Los Banos 500 kV

Moss Landing-Coburn #1 230 kV

Moss Landing-Las Aguilas #2 230 kV

Oakdale TID-Newark #1 115 kV

Oakdale TID-Newark #2 115 kV

The substations that delineate the Greater Bay Area are:

Lakeville is out Sobrante is in

Ignacio is out Sobrante is in

Parkway is out Moraga is in

Bahia is out Moraga is in

Lambie SW Sta is in Vaca Dixon is out

Peabody is out Contra Costa P.P. is in

Tesla is out Kelso is in

Tesla is out Delta Switching Yard is in

Tesla is out Pittsburg is in

Tesla is out Pittsburg is in

Tesla is out Newark is in

Tesla is out Newark is in

Tesla is out Ravenswood is in

Tesla is out Metcalf is in

Los Banos is out Moss Landing is in

Coburn is out Moss Landing is in

Las Aguilas is out Moss Landing is in

Oakdale TID is out Newark is in

Oakdale TID is out Newark is in

Greater Bay LCR Area Diagram

Figure 3.3-31 Greater Bay LCR Area

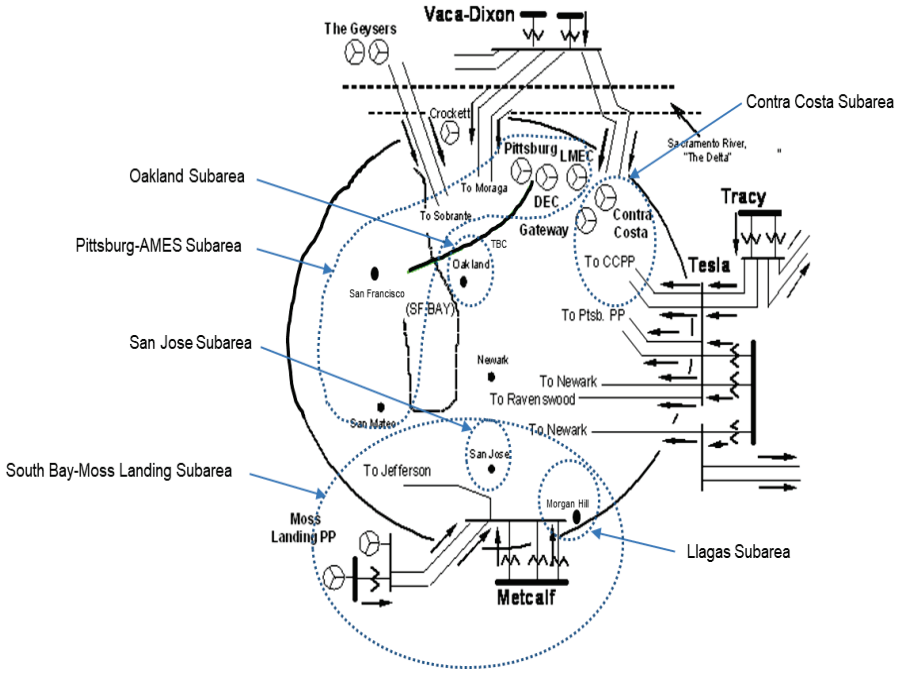

Greater Bay LCR Area Load and Resources

Table 3.3-27 provides the forecasted load and resources. The list of generators within the LCR area are provided in Attachment A.

In year 2027 the estimated time of local area peak is 18:40 PM.

At the local area peak time the estimated, ISO metered, solar output is 8.7%.

If required, all technology type resources, including solar, are dispatched at NQC.

Table 3.3-27 Greater Bay Area LCR Area 2027 Forecast Load and Resources

Load (MW)		**Generation (MW)**	**Aug NQC**	**At Peak**
Gross Load	12635	Market/Net Seller	6139	6139
AAEE	-138	Wind	373	373
Behind the meter DG	-157	Battery	1356	1356
Net Load	**12340**	MUNI/QF	572	572
Transmission Losses	428	Existing 20-minute Demand Response	65	65
Pumps	264	Solar	8	8
Load + Losses + Pumps	**13032**	**Total**	**8513**	**8513**

Approved transmission projects modeled

- Moraga – Castro Valley 230 kV Line capacity increase
- Contra Costa PP 230 kV Line Terminals Reconfiguration Project
- Lone Tree – Cayetano – Newark corridor Series Compensation
- Vasona – Metcalf 230 kV Line limiting elements removal
- Oakland Clean Energy Initiative Project
- Ravenswood 230/115 kV Transformer #1 Limiting Facility Upgrade
- Newark – Milpitas #1 115 kV Line Limiting Facility Upgrade
- Series Compensation on Los Esteros – Nortech 115 kV Line
- South Bay Area Limiting Elements Upgrade

3.3.5.2 *Llagas Sub-area*

Llagas is a sub-area of the Greater Bay LCR area.

Llagas LCR Sub-area Diagram

Figure 3.3-32 Llagas LCR Sub-area

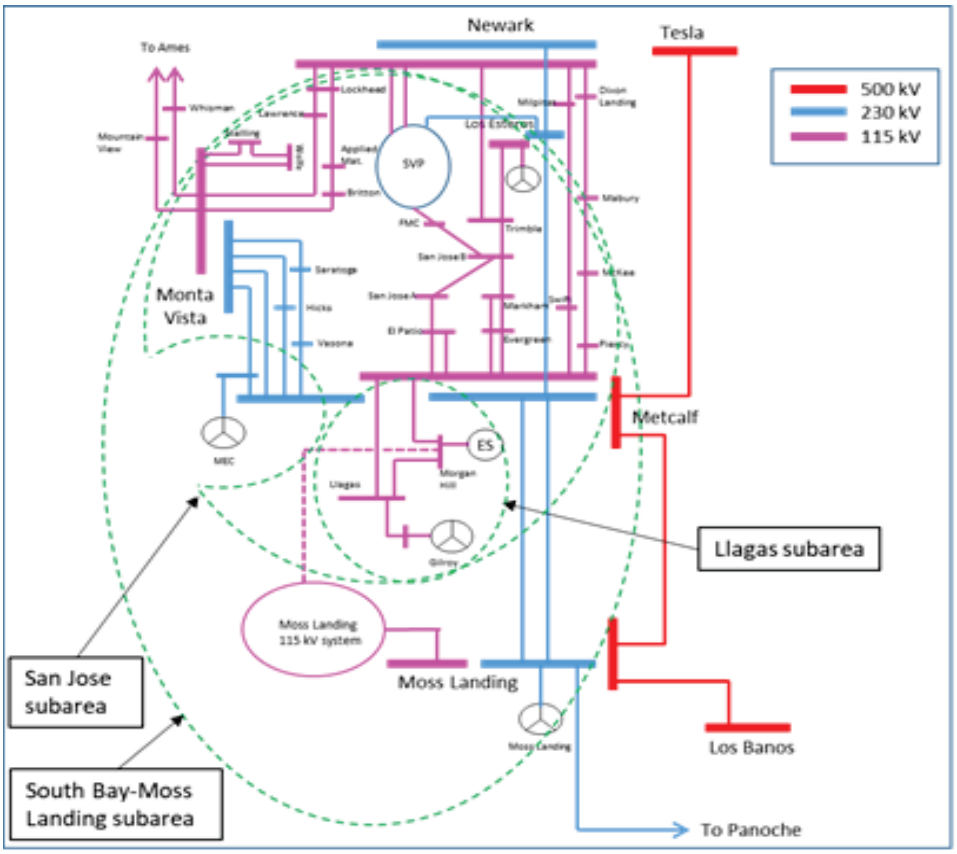

Llagas LCR Sub-area Load and Resources

Table 3.3-28 provides the forecasted load and resources. The list of generators within the LCR Sub-area are provided in Attachment A.

Table 3.3-28 Llagas LCR Sub-area 2027 Forecast Load and Resources

Load (MW)		**Generation (MW)**	**Aug NQC**	**At Peak**
Gross Load	335	Market/Net Seller	256	256
AAEE	-3	Battery	20	20
Behind the meter DG	-5	MUNI/QF	0	0
Net Load	327	Solar	0	0
Transmission Losses	2	Existing 20-minute Demand Response	0	0
Pumps	0	Mothballed	0	0
Load + Losses + Pumps	**329**	**Total**	**276**	**276**

Llagas LCR Sub-area Hourly Profiles

Figure 3.3-33 illustrates the forecast 2027 profile for the peak day for the Llagas LCR sub-area with the Category P3 normal and emergengy load serving capabilities without local resources. The chart also includes an estimated amount of energy storage that can be added to this local area from charging restriction perspective. Figure 3.3-34 illustrates the forecast 2027 hourly profile for Llagas LCR sub-area with the Category P3 emergency load serving capability without local resources.

Figure 3.3-33 Llagas LCR Sub-area 2027 Peak Day Forecast Profiles

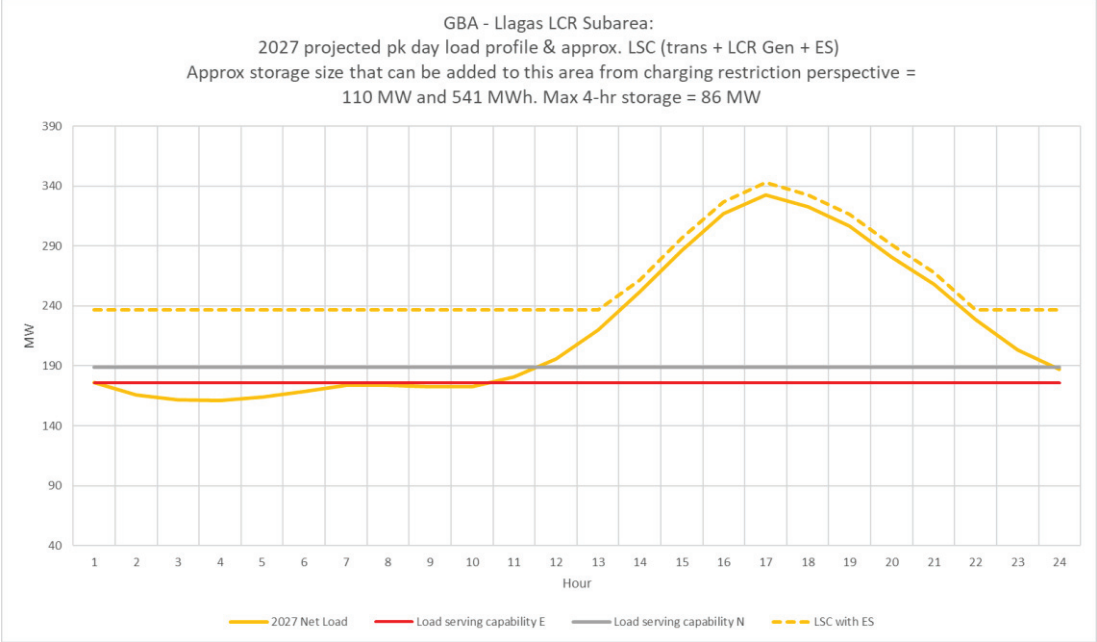

Figure 3.3-34 Llagas LCR Sub-area 2027 Forecast Hourly Profiles

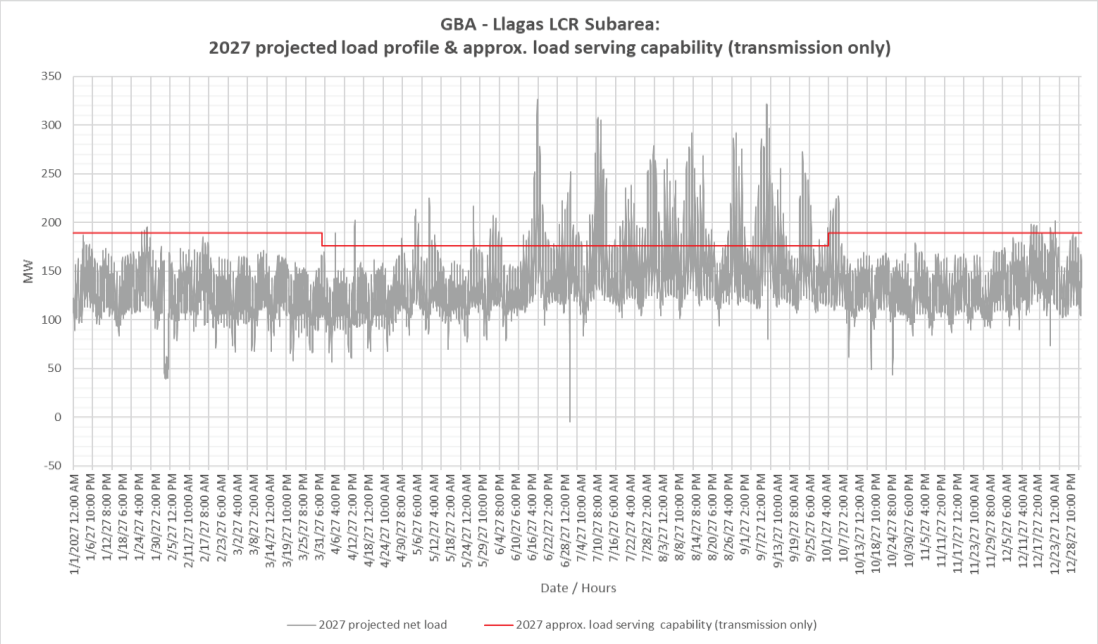

Llagas LCR Sub-area Requirement

Table 3.3-29 identifies the sub-area requirements. The LCR requirement for the worst contingency is 158 MW.

Table 3.3-29 Llagas LCR Sub-area Requirements

Year	Limit	Category	Limiting Facility	Contingency	LCR (MW)
2027	First limit	P3	Metcalf-Llagas 115 kV	Metcalf-Morgan Hill 115 kV with Gilroy Cogen Unit 1 out of service	158

Effectiveness factors:

All units within this sub-area have the same effectiveness factor.

For most helpful procurement information please read procedure 2210Z Effectiveness Factors under 7320 posted at: http://www.caiso.com/Documents/2210Z.pdf

3.3.5.3 *San Jose Sub-area*

San Jose is a Sub-area of the Greater Bay LCR Area.

San Jose LCR Sub-area Diagram

The San Jose LCR Sub-area is identified in Figure 3.3-32.

San Jose LCR Sub-area Load and Resources

Table 3.3-30 provides the forecast load and resources in San Jose LCR sub-area in 2027. The list of generators within the LCR sub-area are provided in Attachment A.

Table 3.3-30 San Jose LCR Sub-area 2027 Forecast Load and Resources

Load (MW)		Generation (MW)	Aug NQC	At Peak
Gross Load	3616	Market/Net Seller	584	584
AAEE	-42	Battery	98	98
Behind the meter DG	-30	MUNI/QF	191	191
Net Load	**3543**	Solar	0	0
Transmission Losses	135	Existing 20-minute Demand Response	0	0
Pumps	0	Mothballed	0	0
Load + Losses + Pumps	**3678**	**Total**	**873**	**873**

San Jose LCR Sub-area Hourly Profiles

Figure 3.3-35 illustrates the forecast 2027 profile for the peak day for the San Jose LCR sub-area with the Category P6 normal and emergengy load serving capabilities without local resources. The chart also includes an estimated amount of energy storage that can be added to this local area from charging restriction perspective. Figure 3.3-36 illustrates the forecast 2027 hourly profile for San Jose LCR sub-area with the Category P6 emergency load serving capability without local resources.

Figure 3.3-35 San Jose LCR Sub-area 2027 Peak Day Forecast Profiles

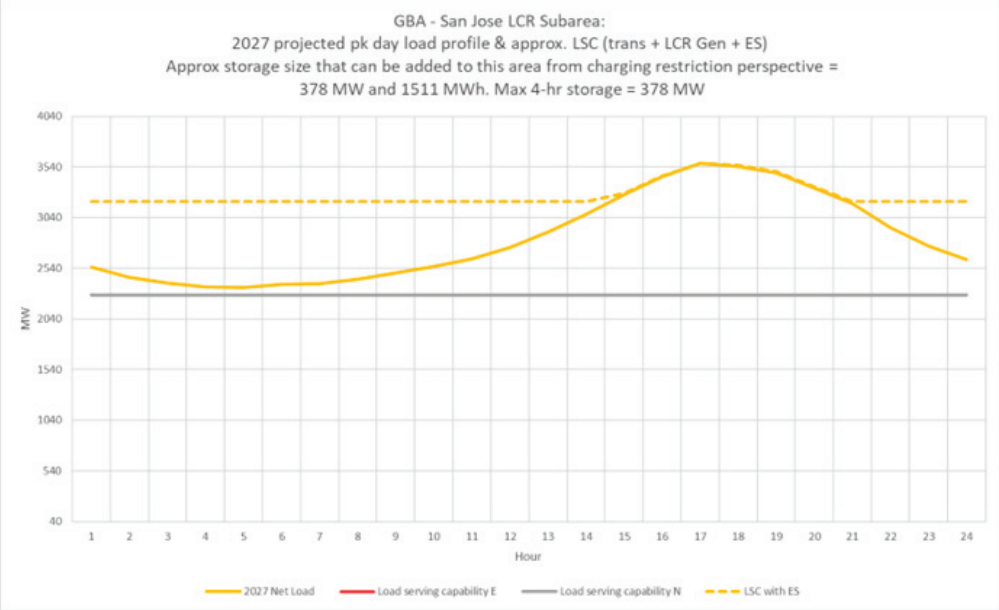

Figure 3.3-36 San Jose LCR Sub-area 2027 Forecast Hourly Profiles

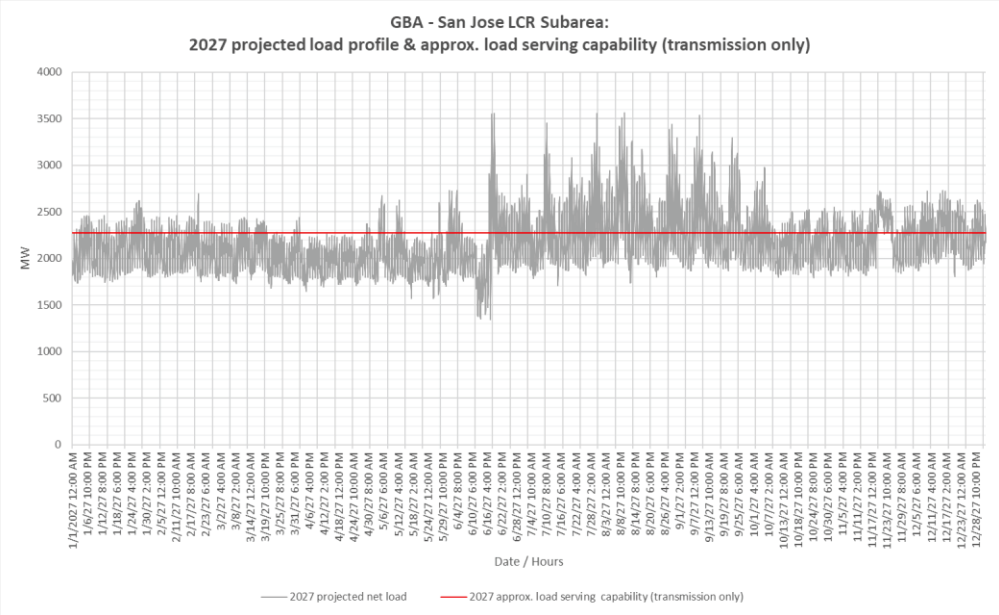

San Jose LCR Sub-area Requirement

Table 3.3-31 identifies the sub-area LCR requirements. The LCR requirement for the worst contingency is 2122 MW including a deficiency of 1249 MW.

Table 3.3-31 San Jose LCR Sub-area Requirements

Year	Limit	Category	Limiting Facility	Contingency	LCR (MW) (Deficiency)
2027	First limit	P6	Newark #11 230/115 kV	Newark #7 & #9 230/115 kV	2122 (1249)

Effectiveness factors:

For other helpful procurement information please read procedure 2210Z Effectiveness Factors under 7320 posted at: http://www.caiso.com/Documents/2210Z.pdf

3.3.5.4 *South Bay-Moss Landing Sub-area*

South Bay-Moss Landing is a Sub-area of the Greater Bay LCR Area.

South Bay-Moss Landing LCR Sub-area Diagram

The South Bay-Moss Landing LCR sub-area is identified in Figure 3.3-32.

South Bay-Moss Landing LCR Sub-area Load and Resources

Table 3.3-32 provides the forecast load and resources in South Bay-Moss Landing LCR sub-area in 2027. The list of generators within the LCR sub-area are provided in Attachment A.

Table 3.3-32 South Bay-Moss Landing LCR Sub-area 2027 Forecast Load and Resources

Load (MW)		Generation (MW)	Aug NQC	At Peak
Gross Load	5490	Market/Net Seller	2201	2201
AAEE	-63	Battery	751	751
Behind the meter DG	-61	MUNI/QF	191	191
Net Load	**5366**	Solar	0	0
Transmission Losses	126	Existing 20-minute Demand Response	0	0
Pumps	0	Mothballed	0	0
Load + Losses + Pumps	**5492**	**Total**	**3143**	**3143**

South Bay-Moss Landing LCR Sub-area Hourly Profiles

Figure 3.3-37 illustrates the forecasted 2027 profile for the peak day for the South Bay-Moss Landing LCR sub-area with the Category P6 normal and emergengy load serving capabilities

without local resources. The chart also includes an estimated amount of energy storage that can be added to this local area from charging restriction perspective. Figure 3.3-38 illustrates the forecast 2027 hourly profile for South Bay-Moss Landing LCR sub-area with the Category P6 emergency load serving capability without local resources.

Figure 3.3-37 South Bay-Moss Landing LCR Sub-area 2027 Peak Day Forecast Profiles

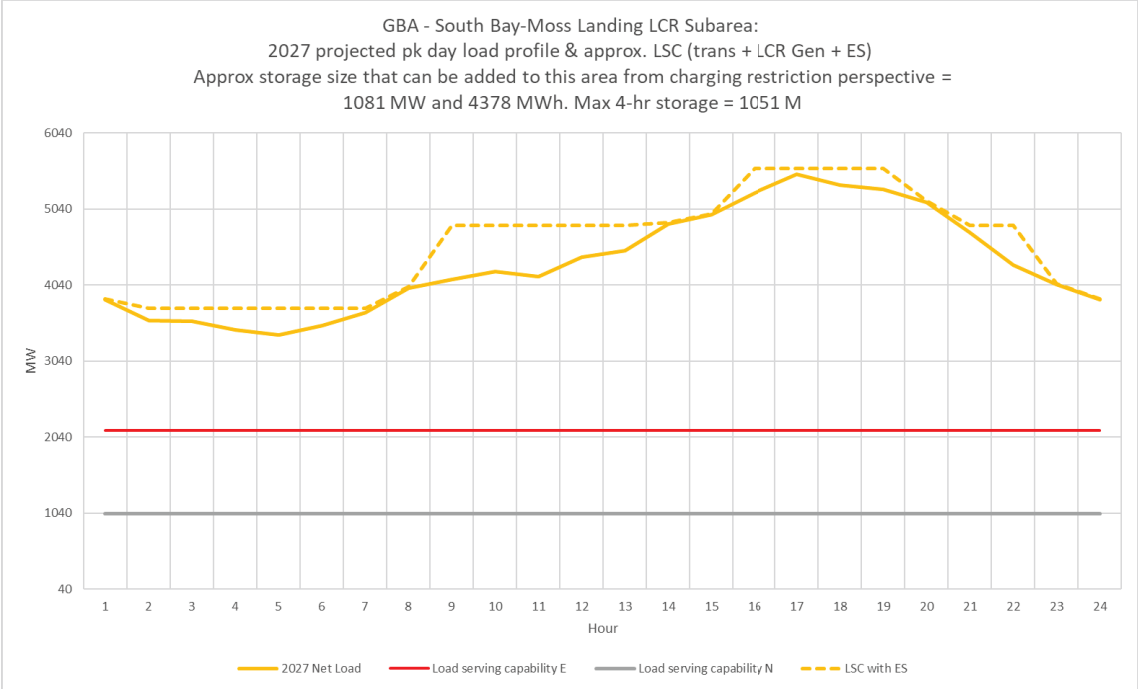

Figure 3.3-38 South Bay-Moss Landing LCR Sub-area 2027 Forecast Hourly Profiles

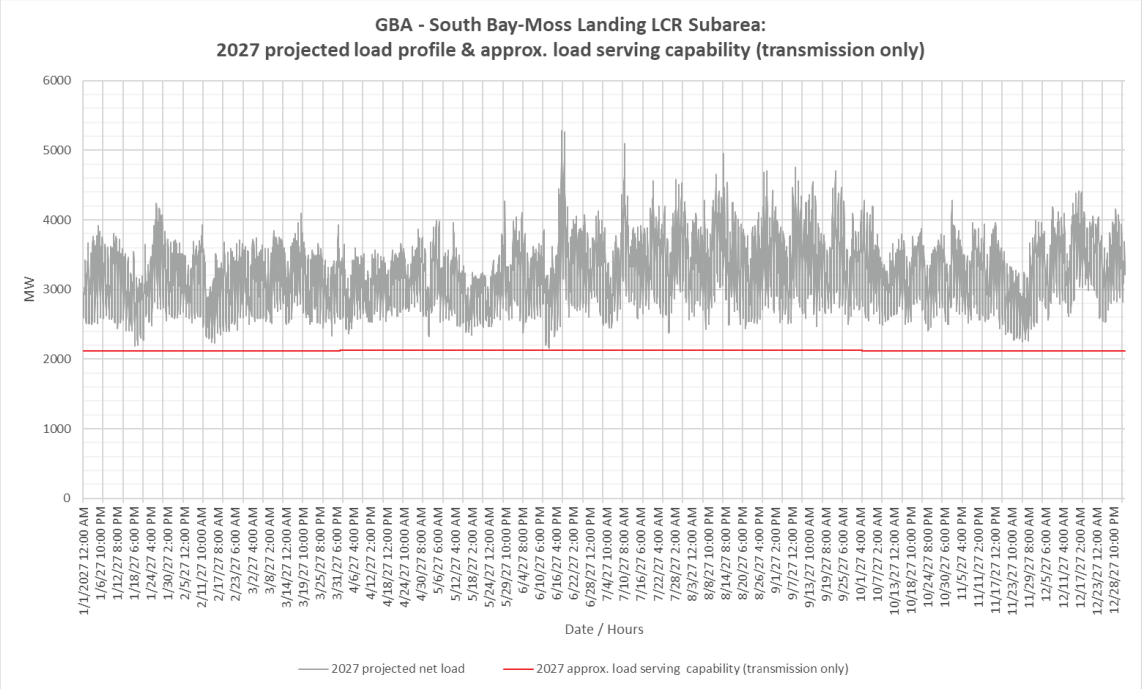

South Bay-Moss Landing LCR Sub- Requirement

Table 3.3-33 identifies the sub-area LCR requirements. The LCR Requirement for the worst contingency is 3658 MW including a deficiency of 515 MW.

Table 3.3-33 South Bay-Moss Landing LCR Sub-area Requirements

Year	Limit	Category	Limiting Facility	Contingency	LCR (MW) Deficiency (MW)
2027	First Limit	P6	Moss Landing-Las Aguilas 230 kV	Tesla-Metcalf 500 kV and Moss Landing-Los Banos 500 kV	3658 (515)

Effectiveness factors:

Effective factors for generators in the South Bay-Moss Landing LCR sub-area are in Attachment B table titled South Bay-Moss Landing.

For other helpful procurement information please read procedure 2210Z Effectiveness Factors under 7320 posted at: http://www.caiso.com/Documents/2210Z.pdf

3.3.5.5 *Oakland Sub-area*

Oakland is a sub-area of the Greater Bay LCR area.

Oakland LCR Sub-area Diagram

Figure 3.3-39 Oakland LCR Sub-area

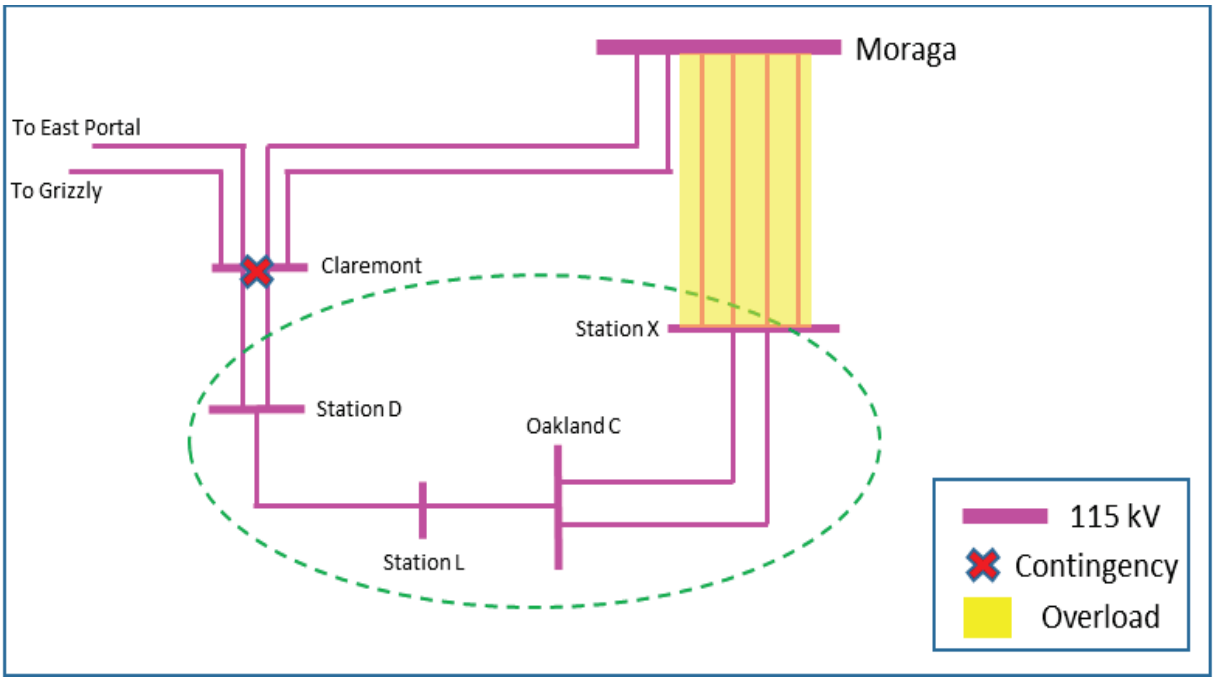

Oakland LCR Sub-area Load and Resources

Table 3.3-34 provides the forecast load and resources in Oakland LCR sub-area in 2027. The list of generators within the LCR sub-area are provided in Attachment A.

Table 3.3-34 Oakland LCR Sub-area 2027 Forecast Load and Resources

Load (MW)		Generation (MW)	Aug NQC	At Peak
Gross Load	409	Market/Net Seller	110	110
AAEE	-5	Battery	55	55
Behind the meter DG	-5	MUNI/QF	49	49
Net Load	**399**	Solar	0	0
Transmission Losses	1	Existing 20-minute Demand Response	0	0
Pumps	0	Mothballed	0	0
Load + Losses + Pumps	**400**	**Total**	**214**	**214**

Oakland LCR Sub-area Hourly Profiles

Figure 3.3-37 illustrates the forecasted 2027 profile for the peak day for the Oakland LCR sub-area with the Category P2 normal and emergengy load serving capabilities without local resources. The chart also includes an estimated amount of energy storage that can be added to this local area from charging restriction perspective. Figure 3.3-38 illustrates the forecast 2027 hourly profile for Oakland LCR sub-area with the Category P2 emergency load serving capability without local resources.

Figure 3.3-40 Oakland LCR Sub-area 2027 Peak Day Forecast Profiles

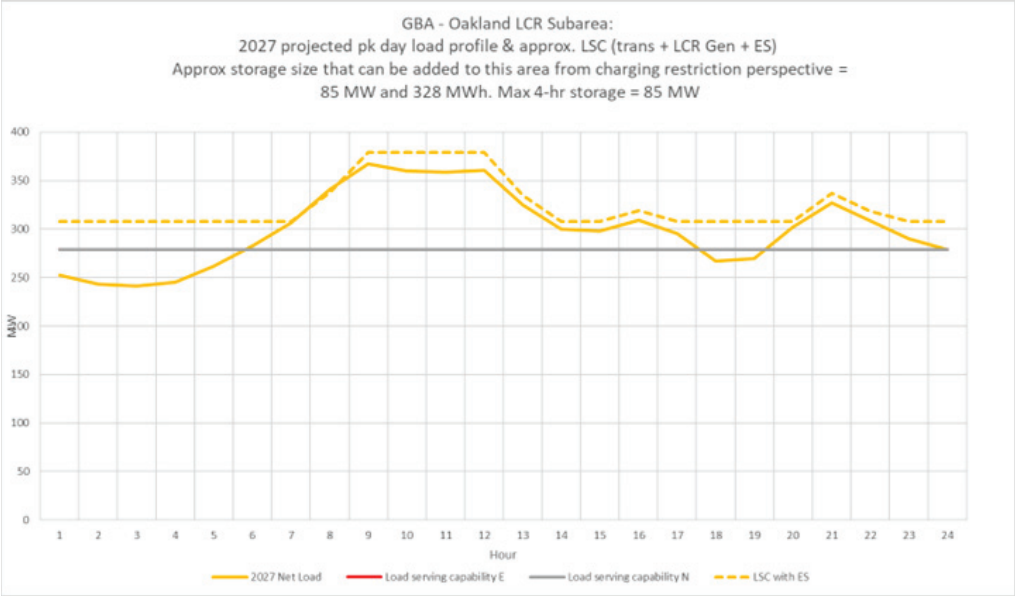

Figure 3.3-41 Oakland LCR Sub-area 2027 Forecast Hourly Profiles

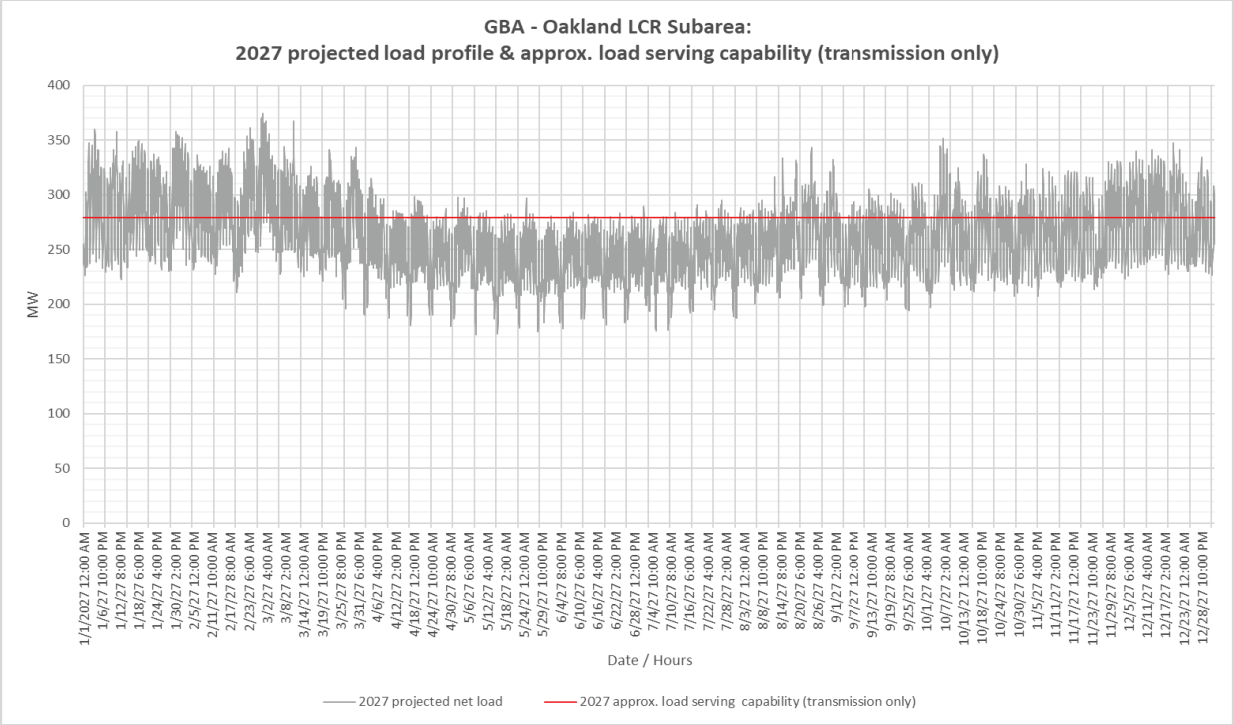

Oakland LCR Sub-area Requirement

Table 3.3-35 identifies the sub-area requirements. The LCR Requirement for the worst contingency is 97 MW.

Table 3.3-35 Oakland LCR Sub-area Requirements

Year	Limit	Category	Limiting Facility	Contingency	LCR (MW)
2027	First limit	P2	Moraga – Oakland X #1-4 115 kV lines	Claremont 115 kV – Section 1D & 2D	97

Effectiveness factors:

All units within the Oakland sub-area have the same effectiveness factor.

For most helpful procurement information please read procedure 2210Z Effectiveness Factors under 7320 posted at: http://www.caiso.com/Documents/2210Z.pdf

3.3.5.6 *Ames-Pittsburg-Oakland Sub-areas Combined*

Ames-Pittsburg-Oakland is a sub-area of the Greater Bay LCR area.

Ames-Pittsburg-Oakland LCR Sub-area Diagram

Figure 3.3-42 Ames-Pittsburg-Oakland LCR Sub-area

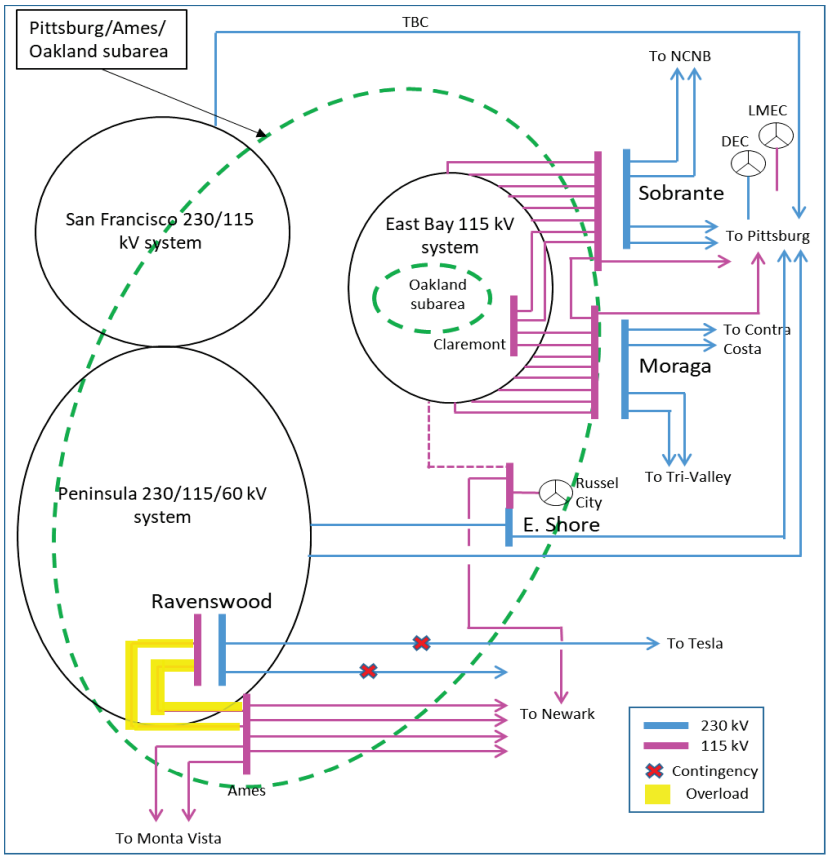

Ames-Pittsburg-Oakland LCR Sub-area Load and Resources

Table 3.3-36 provides the forecast load and resources in Ames-Pittsburg-Oakland LCR sub-area in 2027. The list of generators within the LCR sub-area are provided in Attachment A.

Table 3.3-36 Ames-Pittsburg-Oakland LCR Sub-area 2027 Forecast Load and Resources

Load (MW)	Generation (MW)	Aug NQC	At Peak
The Ames-Pittsburg-Oakland Sub-area does not has a defined load pocket with the limits based upon power flow through the area.	Market/Net Seller	2288	2288
	Battery	255	255
	MUNI/QF	252	252
	Solar	5	5
	Existing 20-minute Demand Response	0	0
	Mothballed	0	0
	Total	**2800**	**2800**

Ames-Pittsburg-Oakland LCR Sub-area Hourly Profiles

The Ames-Pittsburg-Oakland sub-area does not have a defined load pocket with the limits based upon power flow through the area. As such, no load profile is provided for this sub-area.

Ames-Pittsburg-Oakland LCR Sub-area Requirement

Table 3.3-37 identifies the sub-area LCR requirements. The LCR Requirement for the worst contingency is 2429 MW..

Table 3.3-37 Ames-Pittsburg-Oakland LCR Sub-area Requirements

Year	Limit	Category	Limiting Facility	Contingency	LCR (MW) (Deficiency)
2027	First limit	P6	Ames-Ravenswood #1 & #2 115 kV lines	Newark-Ravenswood 230 kV & Tesla-Ravenswood 230 kV lines	2429

Effectiveness factors:

Effective factors for generators in the Ames-Pittsburg-Oakland LCR sub-area are in Attachment B table titled Ames/Pittsburg/Oakland.

For other helpful procurement information please read procedure 2210Z Effectiveness Factors under 7320 posted at: http://www.caiso.com/Documents/2210Z.pdf

3.3.5.7 *Contra Costa Sub-area*

Contra Costa is a sub-area of the Greater Bay LCR area.

Contra Costa LCR Sub-area Diagram

Figure 3.3-43 Contra Costa LCR Sub-area

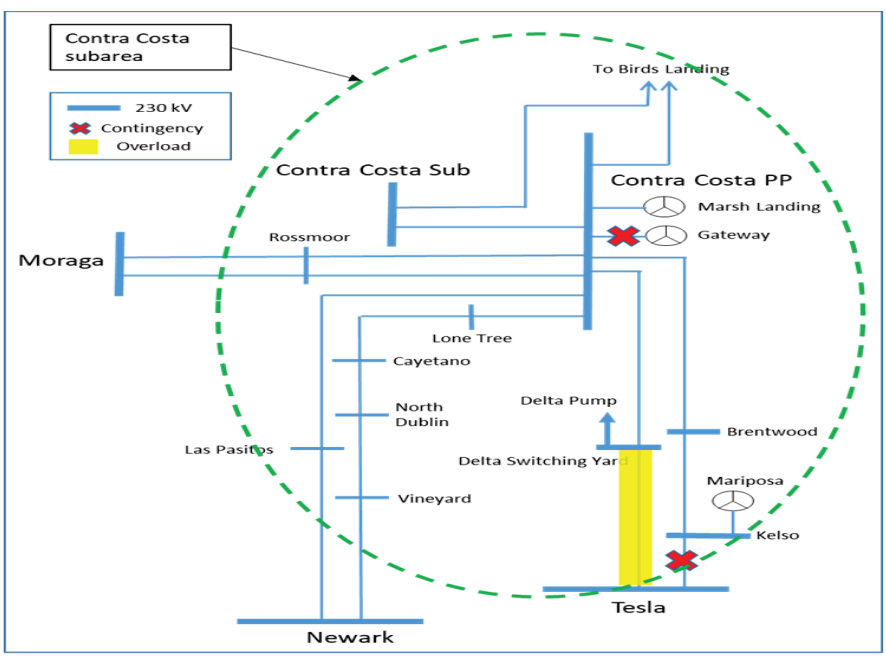

Contra Costa LCR Sub-area Load and Resources

Table 3.3-38 provides the forecast load and resources in Contra Costa LCR sub-area. The list of generators within the LCR sub-area are provided in Attachment A.

Table 3.3-38 Contra Costa LCR Sub-area 2027 Forecast Load and Resources

Load (MW)	Generation (MW)	Aug NQC	At Peak
The Contra Costa Sub-area does not has a defined load pocket with the limits based upon power flow through the area.	Market/Net Seller	1649	1649
	Wind	373	373
	Battery	100	100
	MUNI/QF	127	127
	Existing 20-minute Demand Response	0	0
	Solar	0	0
	Total	**2249**	**2249**

Contra Costa LCR Sub-area Hourly Profiles

The Contra Costa sub-area does not have a defined load pocket with the limits based upon power flow through the area. As such, no load profile is provided for this sub-area.

Contra Costa LCR Sub-area Requirement

Table 3.3-39 identifies the sub-area LCR requirements. The LCR requirement for the worst contingency is 1050 MW.

Table 3.3-39 Contra Costa LCR Sub-area Requirements

Year	Limit	Category	Limiting Facility	Contingency	LCR (MW)
2027	First limit	P2	Delta Switching Yard-Tesla 230 kV Line	Tesla E 230 kV -Sections 2E & 1E	1050

Effectiveness factors:

For other helpful procurement information please read procedure 2210Z Effectiveness Factors under 7230 posted at: http://www.caiso.com/Documents/2210Z.pdf

3.3.5.8 *Bay Area overall*

Bay Area LCR Area Hourly Profiles

Figure 3.3-44 illustrates the forecast 2027 profile for the peak day for the Bay Area LCR area with the Category P6 normal and emergengy load serving capabilities without local resources. The chart also

includes an estimated amount of energy storage that can be added to this local area from charging restriction perspective. Figure 3.3-45 illustrates the forecast 2027 hourly profile for Bay Area LCR area with the Category P6 emergency load serving capability without local resources.

Figure 3.3-44 Bay Area LCR Area 2027 Peak Day Forecast Profiles

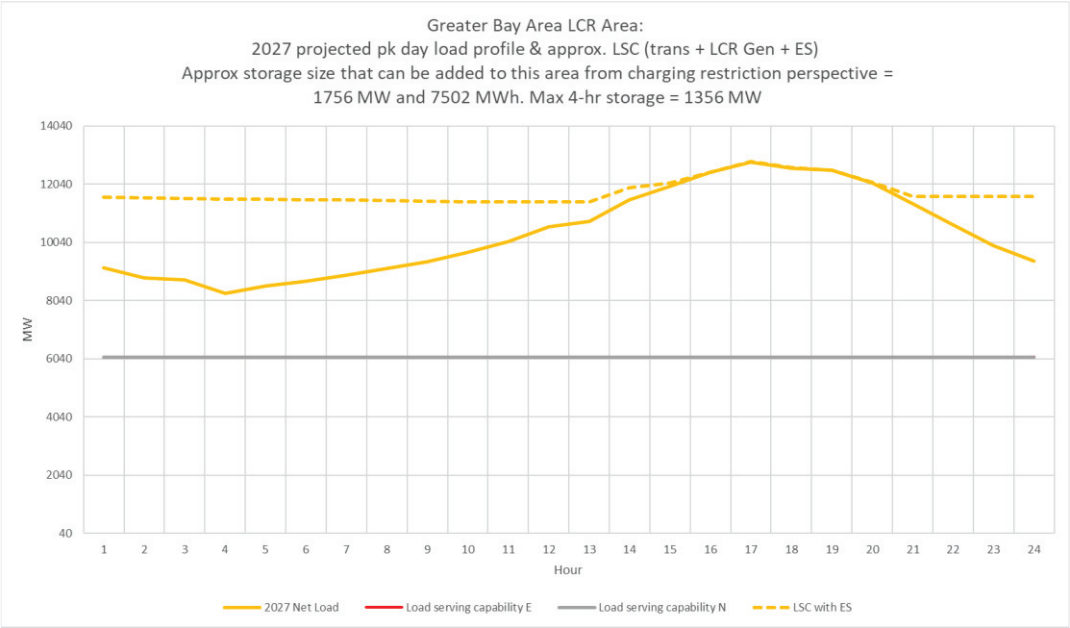

Figure 3.3-45 Bay Area LCR Area 2027 Forecast Hourly Profiles

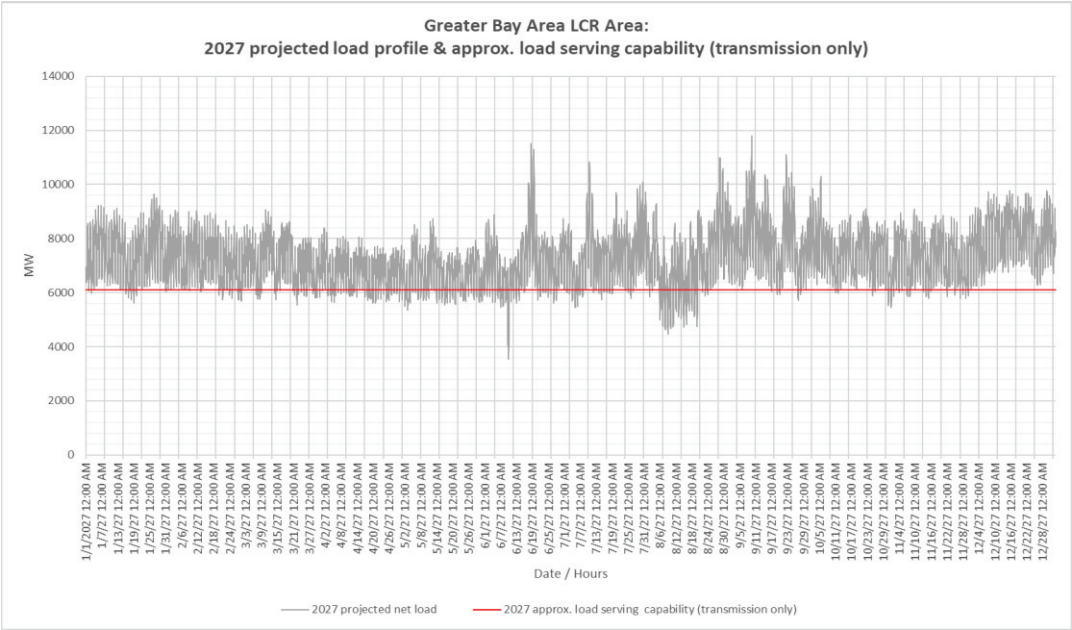

Greater Bay LCR Area Overall Requirement

Table 3.3-40 identifies the area LCR requirements. The LCR requirement for the worst contingency is 9840 MW including 1975 MW of NQC deficiency.

Table 3.3-40 Bay Area LCR Overall area Requirements

Year	Limit	Category	Limiting Facility	Contingency	LCR (MW) (Deficiency)
2027	First limit	P6	Metcalf #13 500/230 kV	Metcalf #11 & #12 500/230 kV	9840 (1975[7])

Effectiveness factors:

Effective factors for generators in the Greater Bay Area LCR sub-area are in Attachment B table titled Greater Bay Area.

For other helpful procurement information please read procedure 2210Z Effectiveness Factors under 7320 posted at: http://www.caiso.com/Documents/2210Z.pdf

Changes compared to last year's results

The load forecast increased by 1425 MW compared to 2026, and consequently, the total LCR need increased by 1988 MW.

3.3.6 Greater Fresno Area

3.3.6.1 *Area Definition:*

The transmission facilities coming into the Greater Fresno area are:

Gates-Mustang #1 230 kV

Gates-Mustang #2 230 kV

Gates #5 230/70 kV Transformer Bank

Mercy Spring 230 /70 Bank # 1

Los Banos #3 230/70 Transformer Bank

Los Banos #4 230/70 Transformer Bank

Warnerville-Wilson 230kV

Melones-North Merced 230 kV line

Panoche-Tranquility #1 230 kV

Panoche-Tranquility #2 230 kV

Panoche #1 230/115 kV Transformer Bank

[7] About 450 MW of resources are required for sub-area needs and not effective to the overall problem.

Panoche #2 230/115 kV Transformer Bank

Corcoran-Smyrna 115kV

Coalinga #1-San Miguel 70 kVThe substations that delineate the Greater Fresno area are:

Gates is out Mustang is in

Gates is out Mustang is in

Gates 230 is out Gates 70 is in

Mercy Springs 230 is out Mercy Springs 70 is in

Los Banos 230 is out Los Banos 70 is in

Los Banos 230 is out Los Banos 70 is in

Warnerville is out Wilson is in

Melones is out North Merced is in

Panoche is out Tranquility #1 is in

Panoche is out Tranquility #2 is in

Panoche 230 is out Panoche 115 is in

Panoche 230 is out Panoche 115 is in

Corcoran is in Smyrna is out

Coalinga is in San Miguel is out

Fresno LCR Area Diagram

Figure 3.3-46 Fresno LCR Area

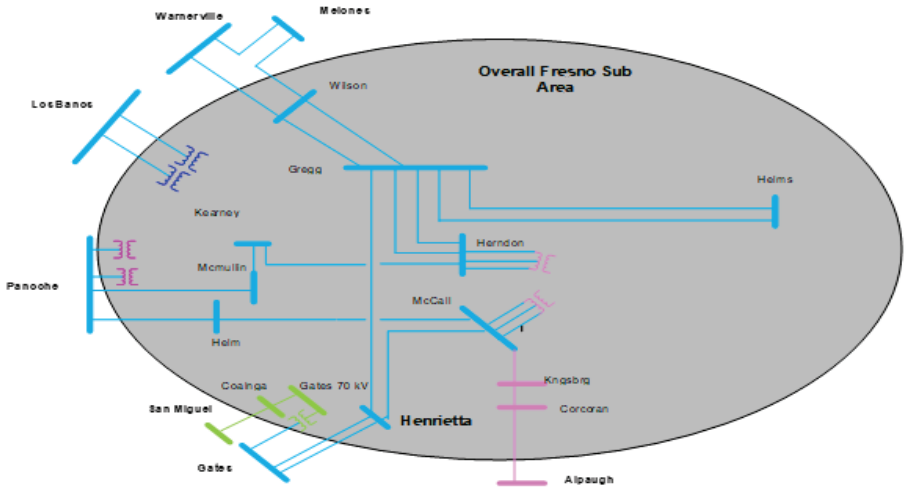

Fresno LCR Area Load and Resources

Table 3.3-41 provides the forecast load and resources in Fresno LCR Area in 2027. The list of generators within the LCR sub-area are provided in Attachment A.

In year 2027 the estimated time of local area peak is 19:20 PM.

At the local area peak time the estimated, ISO metered, solar output is 0%.

If required, all non-solar technology type resources are dispatched at NQC.

Table 3.3-41 Fresno LCR Area 2027 Forecast Load and Resources

Load (MW)		Generation (MW)	Aug NQC	At Peak
Gross Load	3653	Market/Net Seller	2374	2374
AAEE	-48	Battery/Hybrid	1022	1022
Behind the meter DG	-211	MUNI/QF	206	206
Net Load	**3393**	Solar	550	0
Transmission Losses	121	Existing 20-minute Demand Response	0	0
Pumps	0	Wind	34	34
Load + Losses + Pumps	**3514**	**Total**	**4186**	**3636**

Approved transmission projects modeled

Bellota-Warnerville 230 kV Reconductoring (HHWP upgrades pending)

Wilson-Oro Loma 115 kV Line Reconductoring

3.3.6.2 *Hanford Sub-area*

Hanford is a sub-area of the Fresno LCR area.

Hanford LCR Sub-area Diagram

Figure 3.3-47 Hanford LCR Sub-area

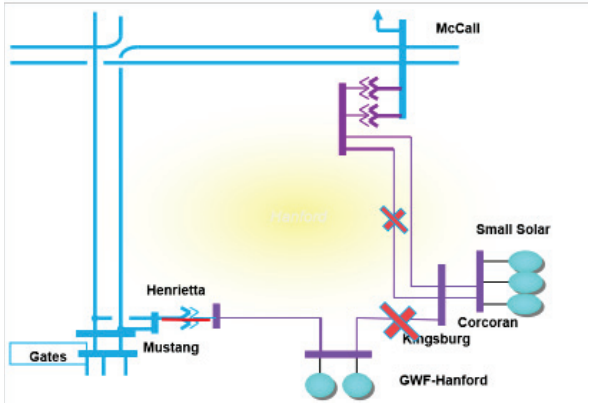

Hanford LCR Sub-area Load and Resources

Table 3.3-42 provides the forecast load and resources in Hanford LCR sub-area in 2027. The list of generators within the LCR sub-area are provided in Attachment A.

Table 3.3-42 Hanford LCR Sub-area 2027 Forecast Load and Resources

Load (MW)		Generation (MW)	Aug NQC	At Peak
Gross Load	221	Market/Net Seller	133	133
AAEE	-2	Battery	32	32
Behind the meter DG	-11	MUNI/QF	0	0
Net Load	**207**	Solar	51	0
Transmission Losses	6	Existing 20-minute Demand Response	0	0
Pumps	0	Mothballed	0	0
Load + Losses + Pumps	**223**	**Total**	**216**	**165**

Hanford LCR Sub-area Hourly Profiles

Figure 3.3-48 illustrates the forecast 2027 profile for the peak day for the Hanford sub-area with the Category P6 normal and emergency load serving capabilities without local resources. The chart also includes an estimated amount of energy storage that can be added to this local area from charging restriction perspective. Figure 3.3-49 illustrates the forecast 2027 hourly profile for Hanford sub-area with the Category P6 emergency load serving capability without local resources.

Figure 3.3-48 Hanford LCR Sub-area 2027 Peak Day Forecast Profiles

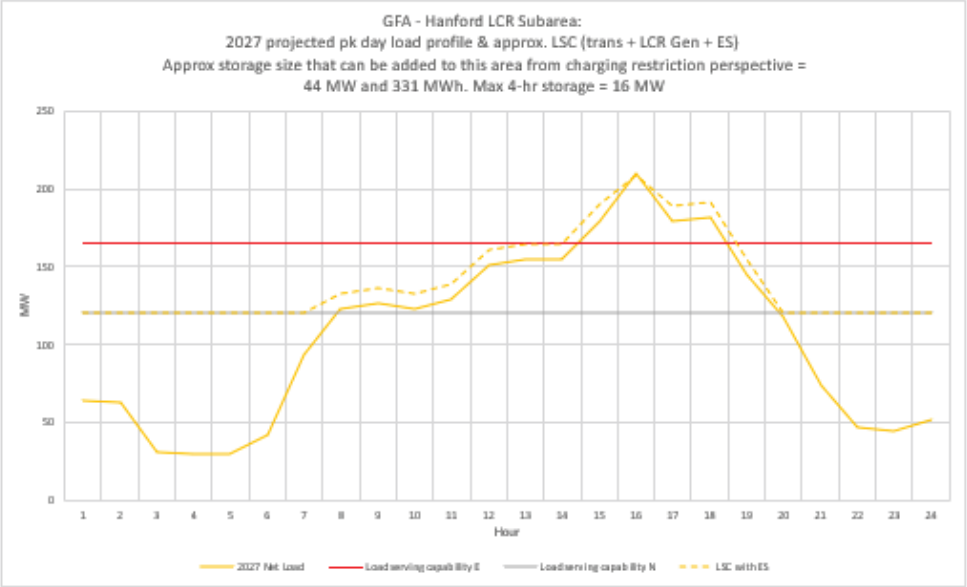

Figure 3.3-49 Hanford LCR Sub-area 2027 Forecast Hourly Profiles

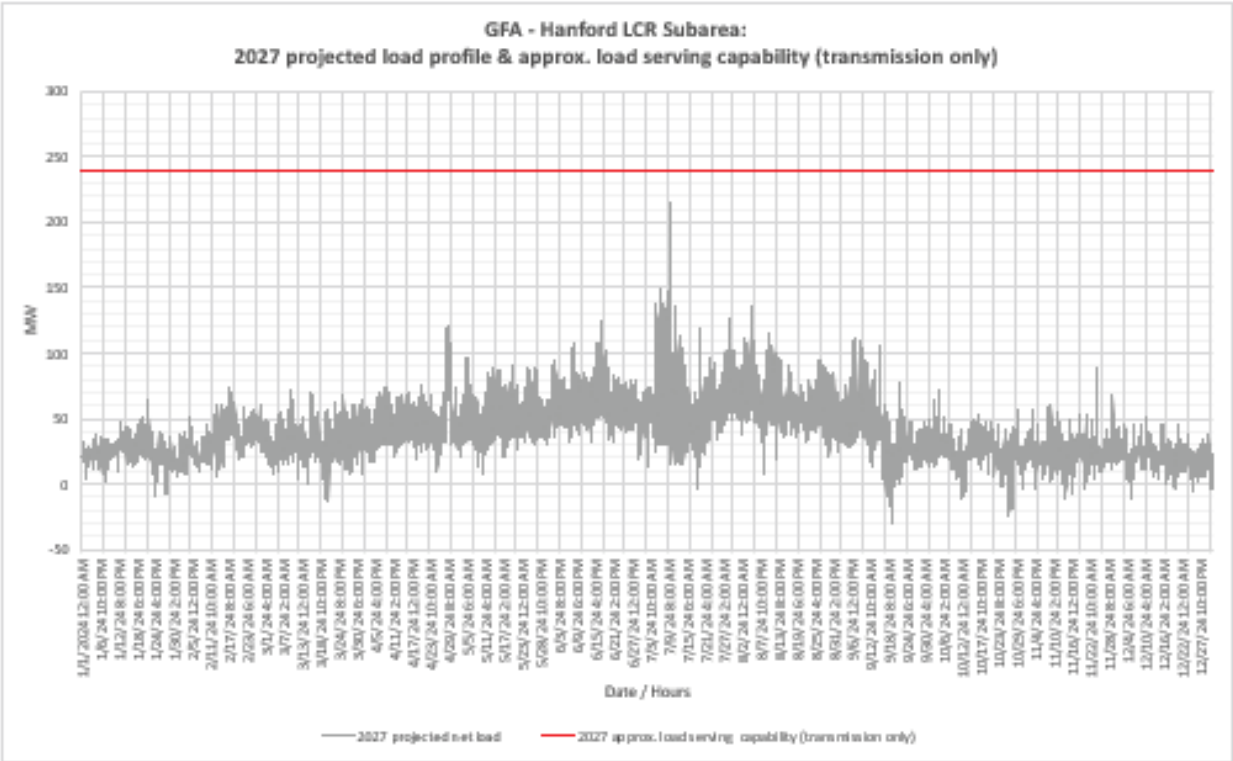

Hanford LCR Sub-area Requirement

Table 3.3-43 identifies the sub-area requirements. The LCR Requirement for a Category P6 contingency is 34 MW.

Table 3.3-43 Hanford LCR Sub-area Requirements

Year	Limit	Category	Limiting Facility	Contingency	LCR (MW) (Deficiency)
2027	First Limit	P6	Kingsburg-Contadina 115 kV line	McCall-Kingsburg #1 115 kV line and GWF-Kingsburg 115 kV line	34

Effectiveness factors:

All units within the Hanford sub-area have the same effectiveness factor.

For most helpful procurement information please read procedure 2210Z Effectiveness Factors under 7430 posted at: http://www.caiso.com/Documents/2210Z.pdf

3.3.6.3 *Coalinga Sub-area*

Coalinga is a sub-area of the Fresno LCR area.

Coalinga LCR Sub-area Diagram

Figure 3.3-50 Coalinga LCR Sub-area

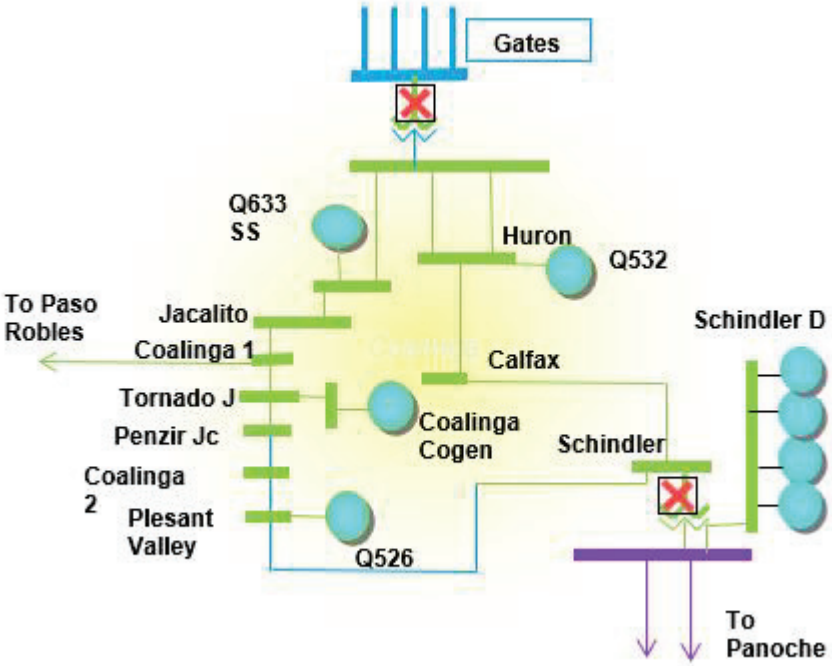

Coalinga LCR Sub-area Load and Resources

Table 3.3-44 provides the forecast load and resources in Coalinga LCR sub-area. The list of generators within the LCR sub-area are provided in Attachment A.

Table 3.3-44 Coalinga LCR Sub-area 2027 Forecast Load and Resources

Load (MW)		**Generation (MW)**	**Aug NQC**	**At Peak**
Gross Load	130	Market/Net Seller	0	0
AAEE	-1	Battery	10	10
Behind the meter DG	-5	MUNI/QF	3	3
Net Load	**124**	Solar	17	0
Transmission Losses	2	Existing 20-minute Demand Response	0	0
Pumps	0	Mothballed	0	0
Load + Losses + Pumps	**127**	**Total**	**30**	**13**

Coalinga LCR Sub-area Hourly Profiles

Figure 3.3-51 illustrates the forecast 2027 profile for the peak day for the Coalinga sub-area with the Category P6 normal and emergency load serving capabilities without local resources. The

chart also includes an estimated amount of energy storage that can be added to this local area from charging restriction perspective. Figure 3.3-52 illustrates the forecast 2027 hourly profile for Coalinga sub-area with the Category P6 emergency load serving capability without local resources.

Figure 3.3-51 Coalinga LCR Sub-area 2027 Peak Day Forecast Profiles

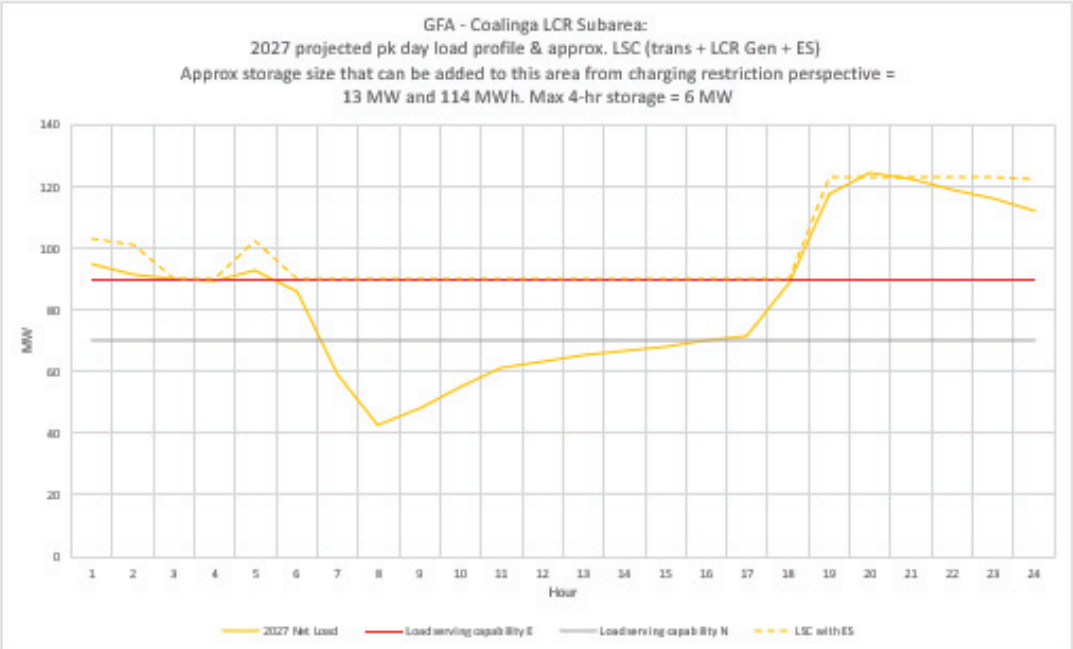

Figure 3.3-52 Coalinga LCR Sub-area 2027 Forecast Hourly Profiles

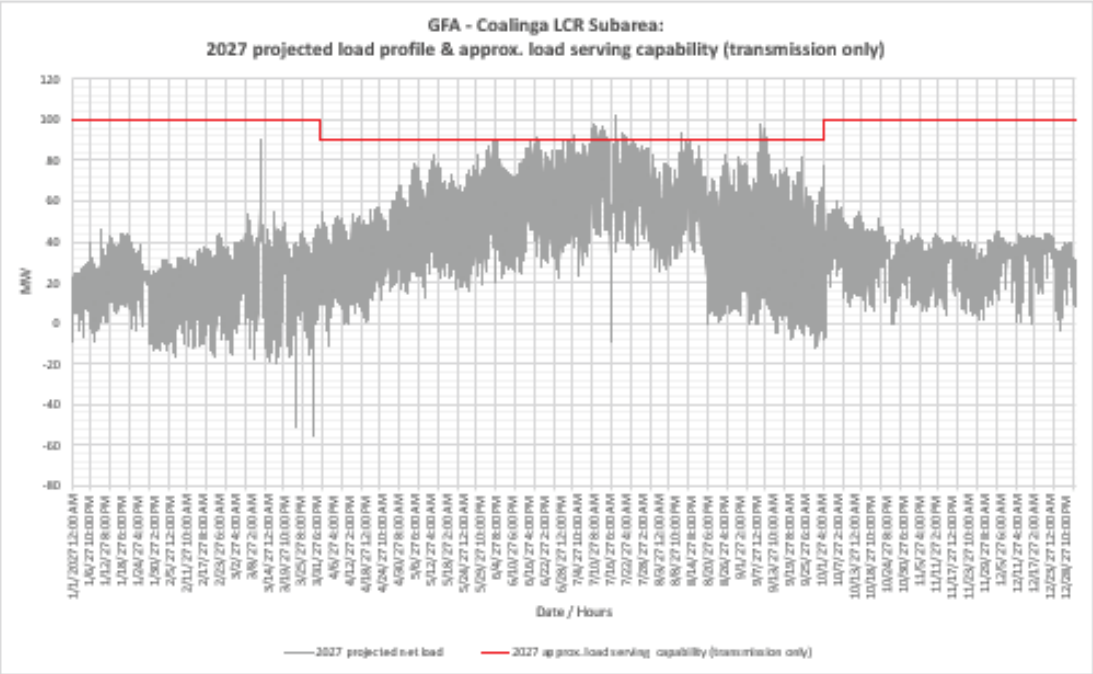

Coalinga LCR Sub-area Requirement

Table 3.3-45 identifies the sub-area requirements. The LCR Requirement for a Category P6 contingency is 30 MW including a 17 MW at peak deficiency.

Table 3.3-45 Coalinga LCR Sub-area Requirements

Year	Limit	Category	Limiting Facility	Contingency	LCR (MW) (Deficiency)
2027	First Limit	P6	Five Point-CalFlax 70 kV line	Gates 230/70 kV bank 5 and Schindler 115/70 kV bank 2	30 (17 Peak; 0 NQC)

Effectiveness factors:

All units within the Coalinga sub-area have the same effectiveness factor.

For most helpful procurement information please read procedure 2210Z Effectiveness Factors under 7430 posted at: http://www.caiso.com/Documents/2210Z.pdf

3.3.6.4 *Borden Sub-area*

Borden is a sub-area of the Fresno LCR area.

Borden LCR Sub-area Diagram

Figure 3.3-53 Borden LCR Sub-area

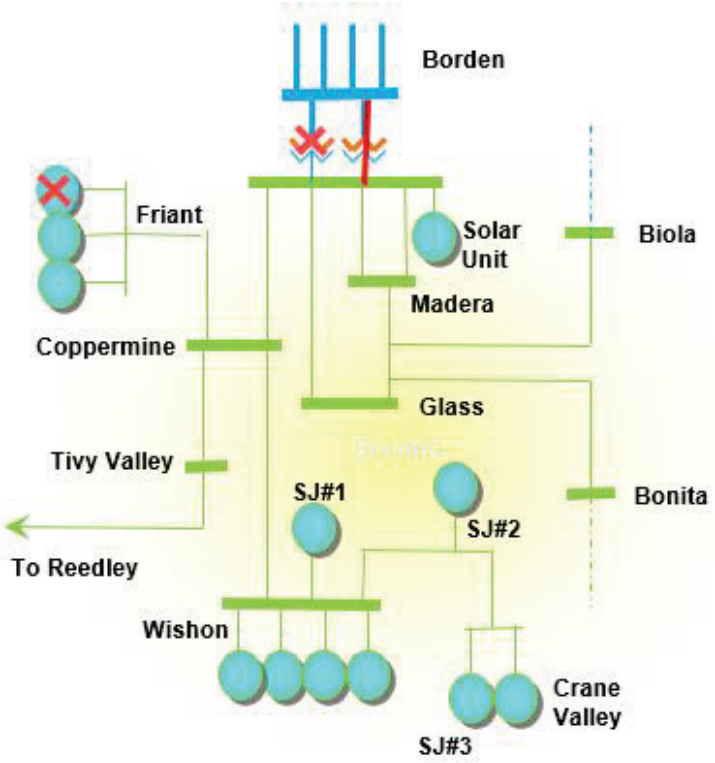

Borden LCR Sub-area Load and Resources

Table 3.3-46 provides the forecast load and resources in Borden LCR sub-area. The list of generators within the LCR sub-area are provided in Attachment A.

Table 3.3-46 Borden LCR Sub-area 2027 Forecast Load and Resources

Load (MW)		**Generation (MW)**	**Aug NQC**	**At Peak**
Gross Load	195	Market/Net Seller	13	13
AAEE	-2	Battery	0	0
Behind the meter DG	-10	MUNI/QF	0	0
Net Load	**182**	Solar	13	0
Transmission Losses	4	Existing 20-minute Demand Response	0	0
Pumps	0	Mothballed	0	0
Load + Losses + Pumps	**186**	**Total**	**26**	**13**

Borden LCR Sub-area Hourly Profiles

Figure 3.3-54 illustrates the forecasted 2027 profile for the peak day for the Borden sub-area with the Category P6 normal and emergency load serving capabilities without local resources. The chart also includes an estimated amount of energy storage that can be added to this local area from charging restriction perspective. Figure 3.3-55 illustrates the forecasted 2027 hourly profile for Borden sub-area with the Category P6 emergency load serving capability without local resources.

Figure 3.3-54 Borden LCR Sub-area 2027 Peak Day Forecast Profiles

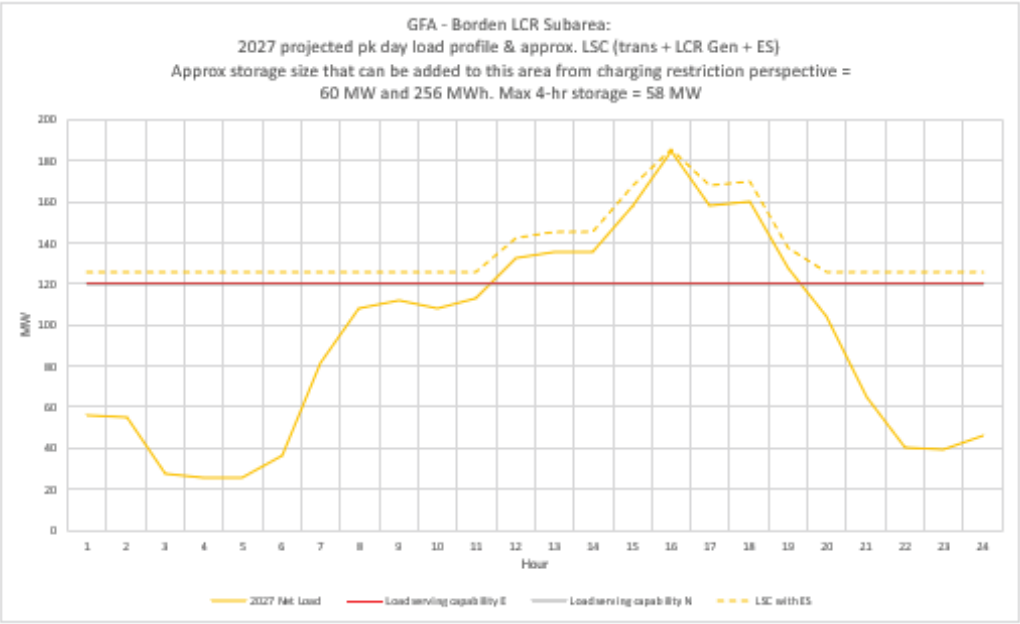

Figure 3.3-55 Borden LCR Sub-area 2027 Forecast Hourly Profiles

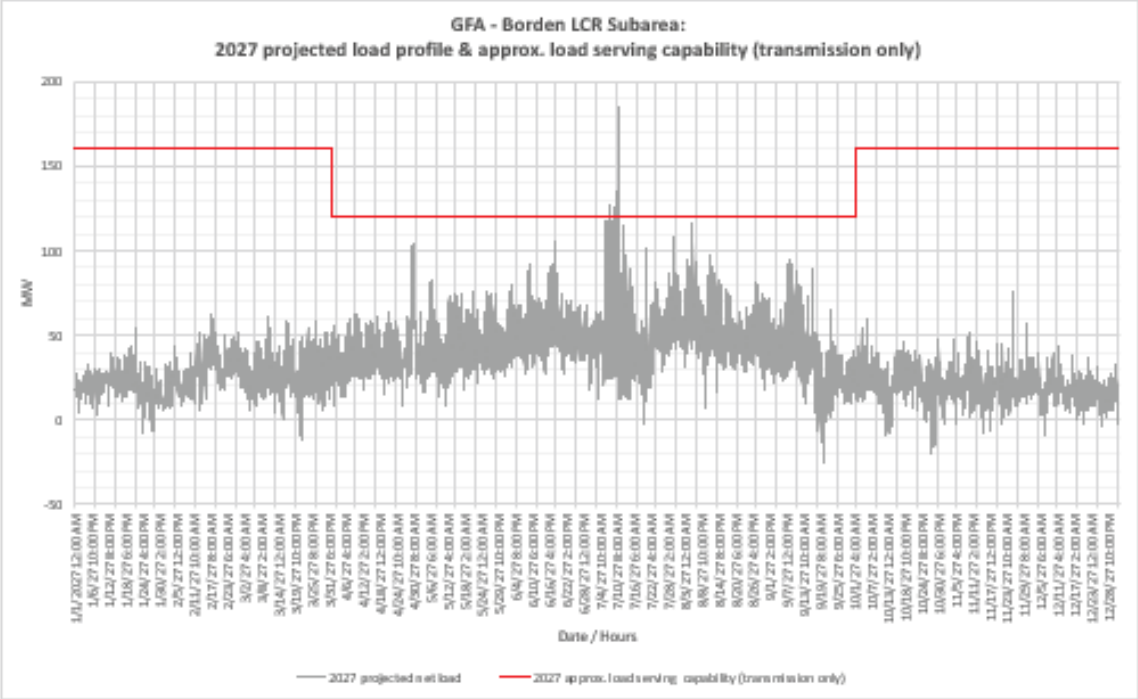

Borden LCR Sub-area Requirement

Table 3.3-47 identifies the sub-area requirements. The LCR Requirement for a Category P3 contingency is 60 MW with a 34 MW NQC deficiency and 47 MW peak deficiency.

Table 3.3-47 Borden LCR Sub-area Requirements

Year	Limit	Category	Limiting Facility	Contingency	LCR (MW) (Deficiency)
2027	First Limit	P3	Borden 230/70 kV TB # 1	Borden 230/70 kV TB # 4 with Friant #2 unit out of service	60 (34 NQC, 47 Peak)

Effectiveness factors:

All units within the Borden sub-area have the same effectiveness factor.

For most helpful procurement information please read procedure 2210Z Effectiveness Factors under 7430 posted at: http://www.caiso.com/Documents/2210Z.pdf

3.3.6.5 *Reedley Sub-area*

Reedley is a sub-area of the Fresno LCR area.

Reedley LCR Sub-area Diagram

Figure 3.3-56 Reedley LCR Sub-area

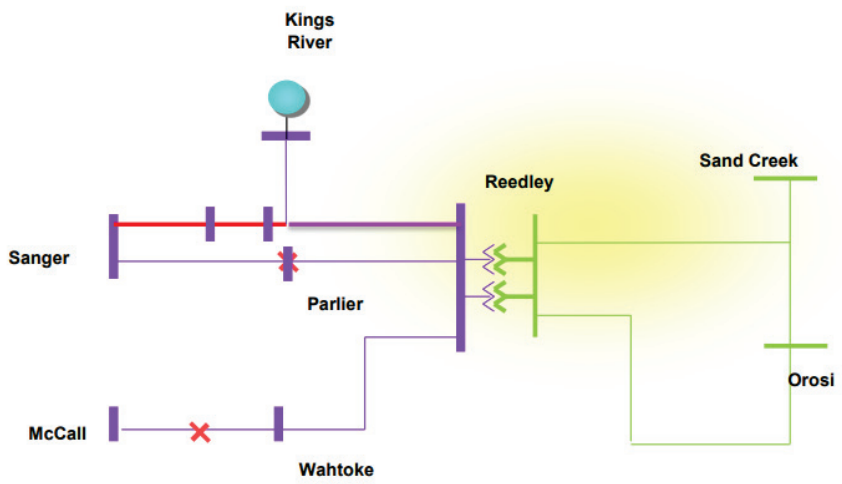

Reedley LCR Sub-area Load and Resources

Table 3.3-48 provides the forecast load and resources in Reedley LCR sub-area. The list of generators within the LCR sub-area are provided in Attachment A.

Table 3.3-48 Reedley LCR Sub-area 2027 Forecast Load and Resources

Load (MW)		Generation (MW)	Aug NQC	At Peak
Gross Load	213	Market/Net Seller	44	44
AAEE	-4	Battery	0	0
Behind the meter DG	-12	MUNI/QF	0	0
Net Load	**198**	LTPP Preferred Resources	0	0
Transmission Losses	55	Existing 20-minute Demand Response	0	0
Pumps	0	Mothballed	0	0
Load + Losses + Pumps	**253**	**Total**	**44**	**44**

Reedley LCR Sub-area Hourly Profiles

Figure 3.3-57 illustrates the forecast 2027 profile for the peak day for the Reedley sub-area with the Category P6 normal and emergency load serving capabilities without local resources. The chart also includes an estimated amount of energy storage that can be added to this local area from charging restriction perspective. Figure 3.3-58 illustrates the forecast 2027 hourly profile for Reedley sub-area with the Category P6 emergency load serving capability without local resources.

Figure 3.3-57 Reedley LCR Sub-area 2027 Peak Day Forecast Profiles

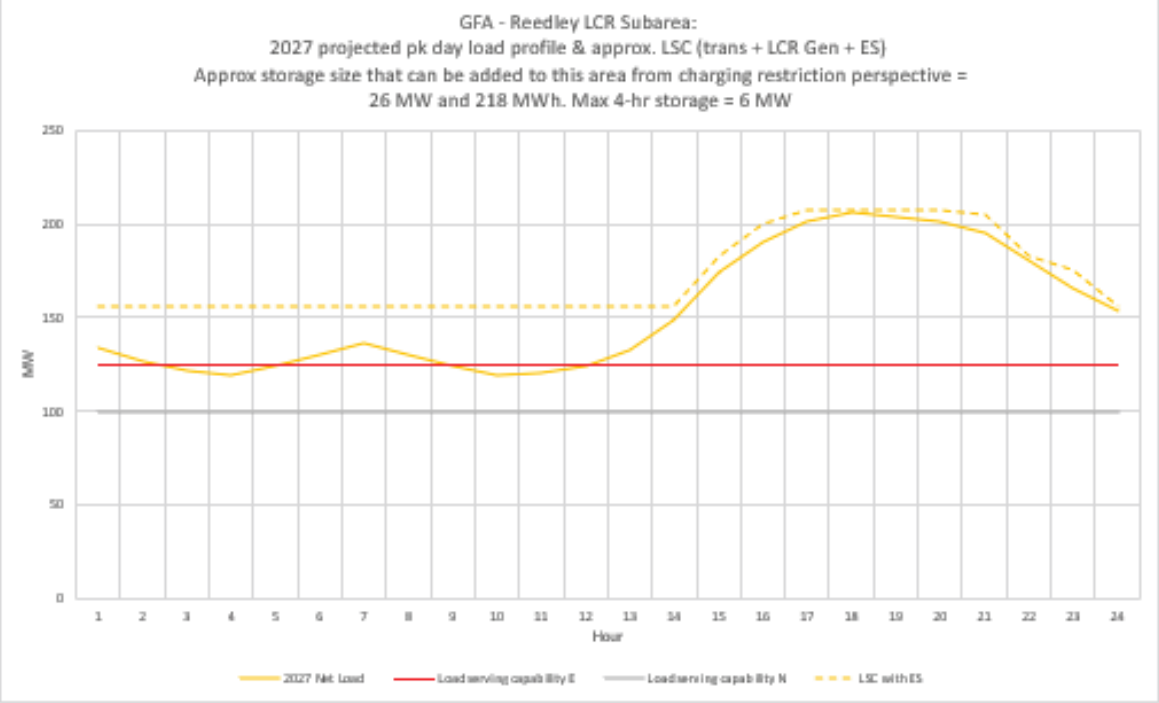

Figure 3.3-58 Reedley LCR Sub-area 2027 Forecast Hourly Profiles

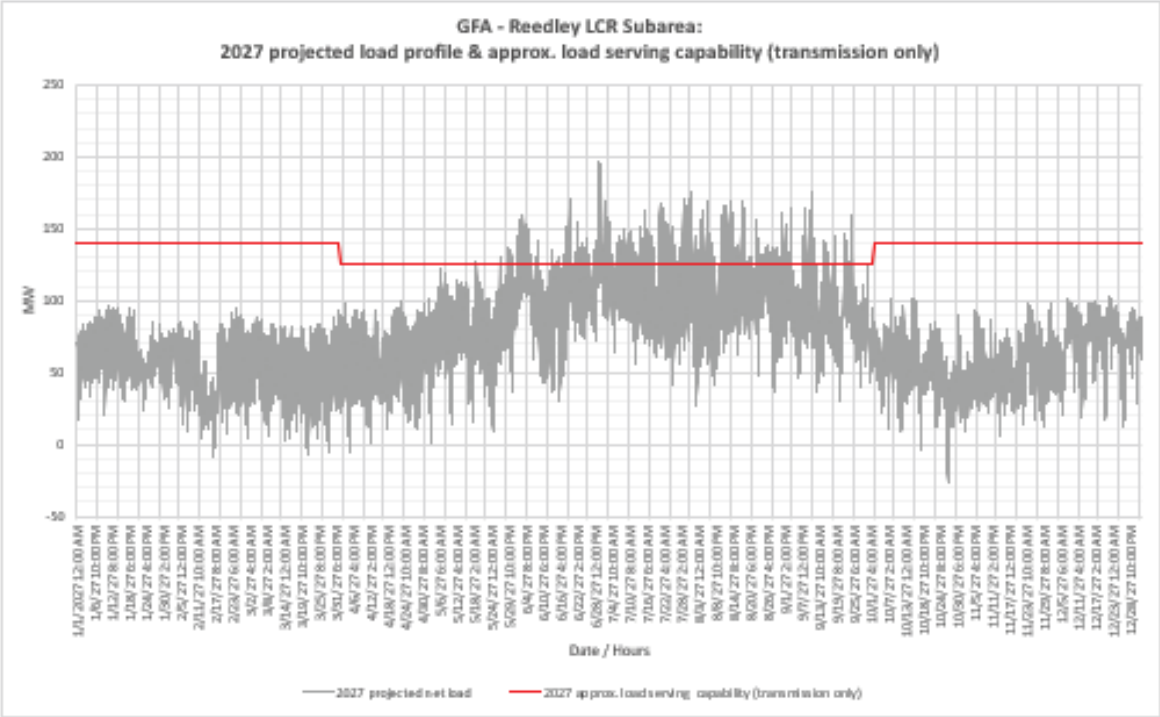

Reedley LCR Sub-area Requirement

Table 3.3-49 identifies the sub-area requirements. The LCR Requirement for a Category P6 contingency is 75 MW with a 31 MW deficiency.

Table 3.3-49 Reedley LCR Sub-area Requirements

Year	Limit	Category	Limiting Facility	Contingency	LCR (MW) (Deficiency)
2027	First Limit	P6	Kings River-Sanger-Reedley 115 kV line with Wahtoke load online	McCall-Reedley 115 kV & Sanger-Reedley 115 kV	75 (31)

Effectiveness factors:

All units within the Reedley sub-area have the same effectiveness factor.

For most helpful procurement information please read procedure 2210Z Effectiveness Factors under 7430 posted at: http://www.caiso.com/Documents/2210Z.pdf

3.3.6.6 *Panoche Sub-area*

Panoche is a sub-area of the Fresno LCR area.

Panoche LCR Sub-area Diagram

Figure 3.3-59 Panoche LCR Sub-area

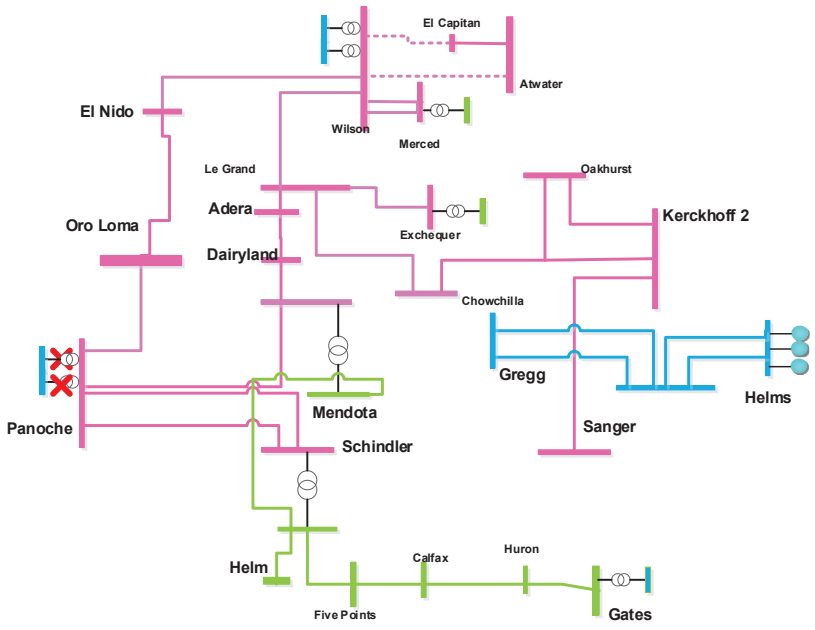

Panoche LCR Sub-area Load and Resources

Table 3.3-50 provides the forecast load and resources in Panoche LCR sub-area. The list of generators within the LCR sub-area are provided in Attachment A.

Table 3.3-50 Panoche LCR Sub-area 2027 Forecast Load and Resources

Load (MW)		Generation (MW)	Aug NQC	At Peak
Gross Load	534	Market/Net Seller	274	274
AAEE	-4	Battery	0	0
Behind the meter DG	-26	MUNI/QF	107	107
Net Load	**503**	Solar	89	0
Transmission Losses	15	Existing 20-minute Demand Response	0	0
Pumps	0	Mothballed	0	0
Load + Losses + Pumps	**518**	**Total**	**470**	**381**

Panoche LCR Sub-area Hourly Profiles

Figure 3.3-60 illustrates the forecast 2027 profile for the peak day for the Panoche sub-area with the Category P6 normal and emergency load serving capabilities without local resources. The chart also includes an estimated amount of energy storage that can be added to this local area from charging restriction perspective. Figure 3.3-61 illustrates the forecast 2027 hourly profile for Panoche sub-area with the Category P6 emergency load serving capability without local resources.

Figure 3.3-60 Panoche LCR Sub-area 2027 Peak Day Forecast Profiles

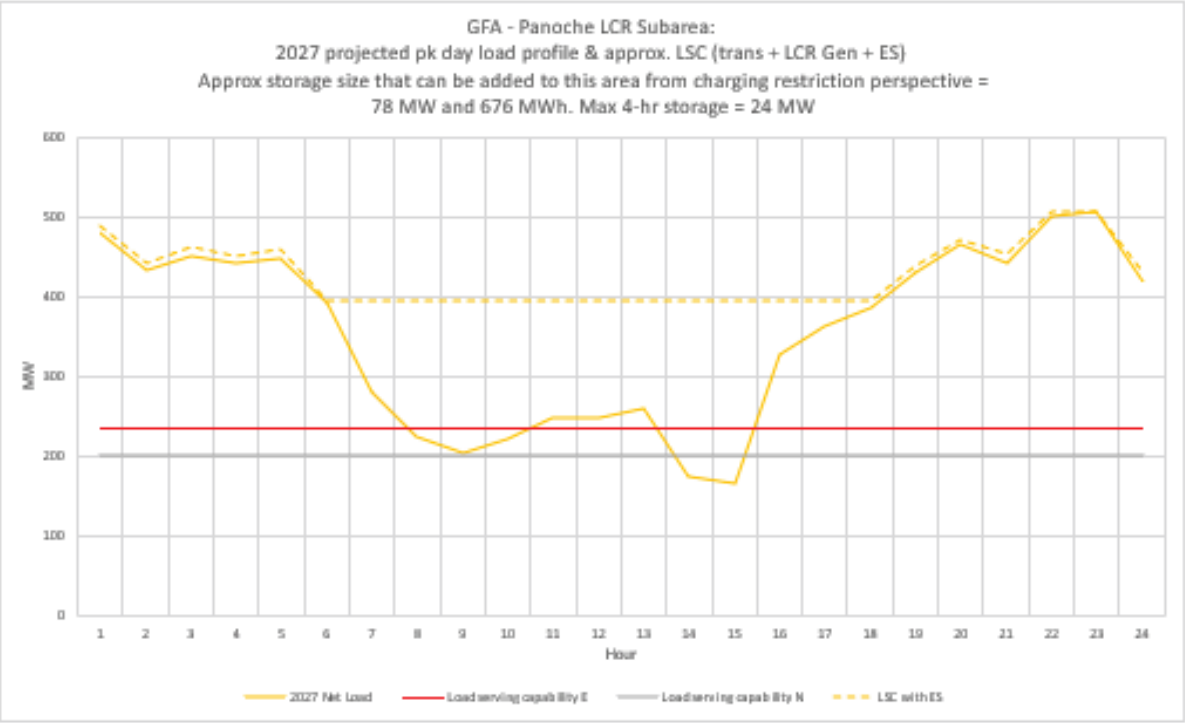

Figure 3.3-61 Panoche LCR Sub-area 2027 Forecast Hourly Profiles

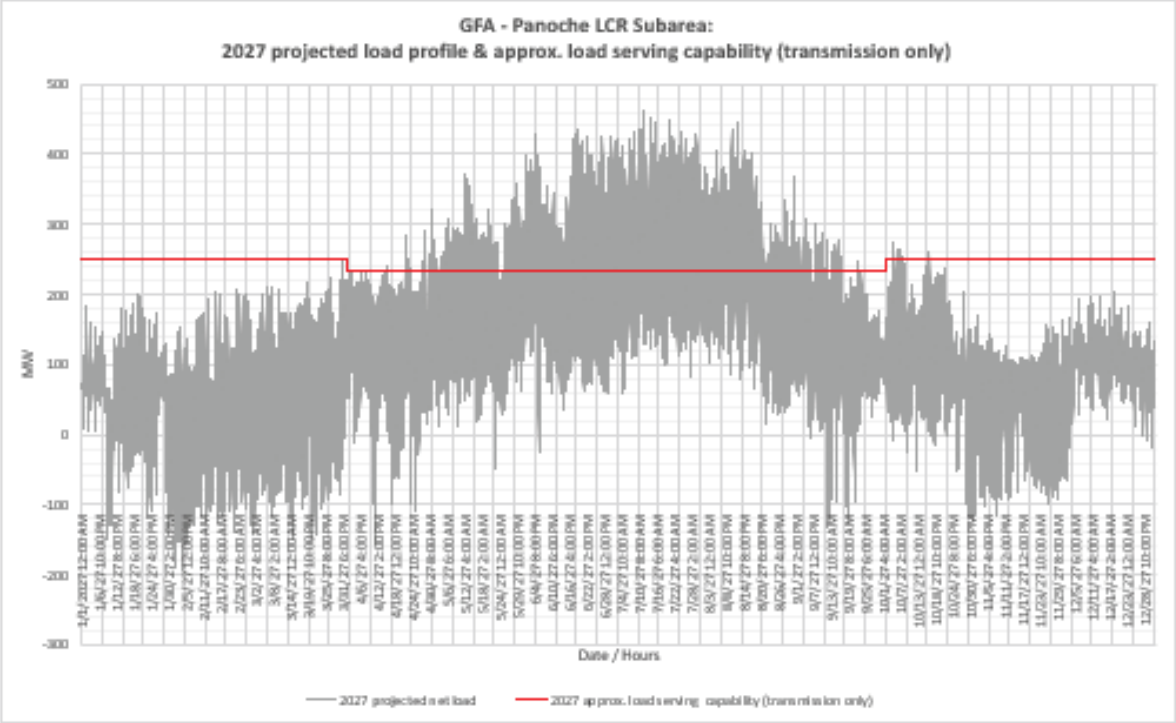

Panoche LCR Sub-area Requirement

Table 3.3-51 identifies the sub-area LCR requirements. The LCR Requirement for a Category P6 contingency is 272 MW.

Table 3.3-51 Panoche LCR Sub-area Requirements

Year	Limit	Category	Limiting Facility	Contingency	LCR (MW) (Deficiency)
2027	First limit	P6	Huron-Calflax 70 kV line	Panoche #1 230/115 kV bank & Panoche #2 230/115 kV bank	272

Effectiveness factors:

For other helpful procurement information please read procedure 2210Z Effectiveness Factors under 7430 posted at: http://www.caiso.com/Documents/2210Z.pdf

3.3.6.7 *Wilson Sub-area*

Wilson is a sub-area of the Fresno LCR area.

Wilson LCR Sub-area Diagram

Figure 3.3-62 Wilson LCR Sub-area

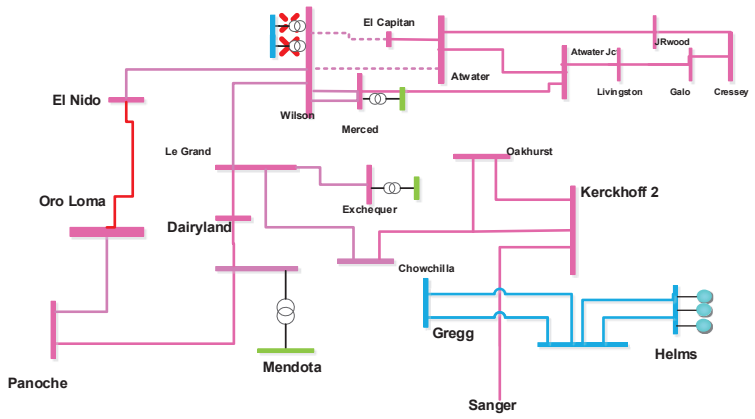

Wilson LCR Sub-area Load and Resources

The Wilson sub-area does not has a defined load pocket with the limits based upon power flow through the area. Table 3.3-52 provides the forecasted resources in the sub-area. The list of generators within the LCR sub-area are provided in Attachment A.

Table 3.3-52 Wilson LCR Sub-area 2027 Forecast Load and Resources

Load (MW)	Generation (MW)	Aug NQC	At Peak
The Wilson sub-area does not have a defined load pocket with the limits based upon power flow through the area.	Market/nd Net Seller	128	128
	Battery	0	0
	MUNI/QF	103	103
	Solar	59	0
	Existing 20-minute Demand Response	0	0
	Mothballed	0	0
	Total	**290**	**231**

Wilson LCR Sub-area Hourly Profiles

The Wilson sub-area is a flow-through sub-area therefore hourly profiles are not provided.

Wilson LCR Sub-area Requirement

Table 3.3-53 identifies the sub-area LCR requirements. The LCR Requirement for a Category P6 contingency is 381 MW with a 150 MW deficiency at Peak and 91 MW NQC deficiency.

Table 3.3-53 Wilson LCR Sub-area Requirements

Year	Limit	Category	Limiting Facility	Contingency	LCR (MW) (Deficiency)
2027	First Limit	P6	Oro Loma-El Nido 115 kV Line	Wilson 230/115kV TB #1 and Wilson 230/115kV TB #2	381 (91 NQC; 150 Peak)

Effectiveness factors:

For other helpful procurement information please read procedure 2210Z Effectiveness Factors under 7430 posted at: http://www.caiso.com/Documents/2210Z.pdf

3.3.6.8 *Herndon Sub-area*

Herndon is a sub-area of the Fresno LCR area.

Herndon LCR Sub-area Diagram

Figure 3.3-63 Herndon LCR Sub-area

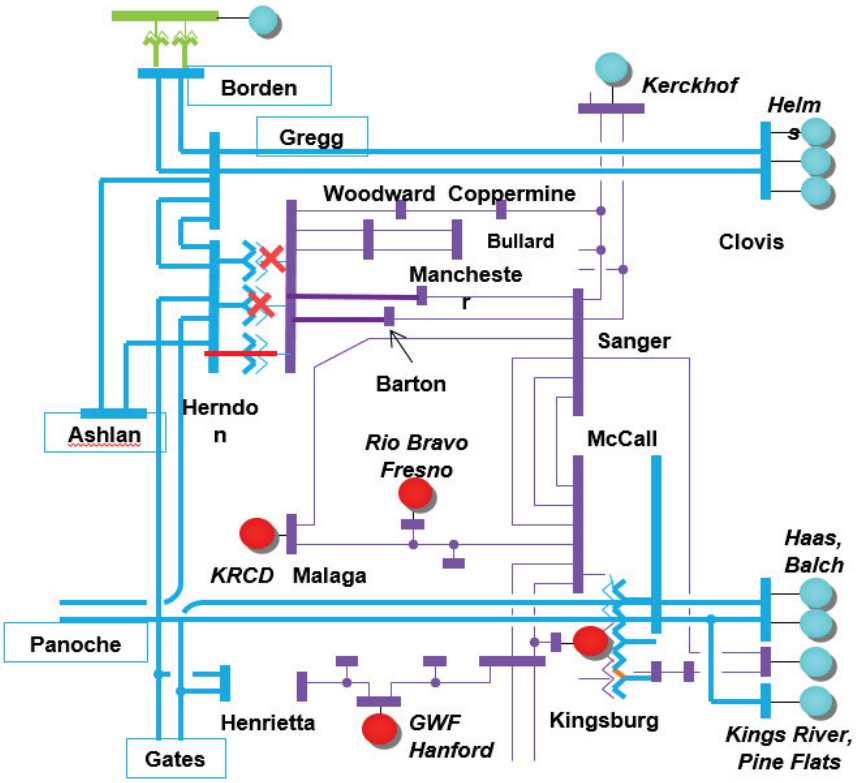

Herndon LCR Sub-area Load and Resources

Table 3.3-54 provides the forecast load and resources in Herndon LCR sub-area. The list of generators within the LCR sub-area are provided in Attachment A.

Table 3.3-54 Herndon LCR Sub-area 2027 Forecast Load and Resources

Load (MW)		Generation (MW)	Aug NQC	At Peak
Gross Load	1636	Market/Net Seller	694	694
AAEE	-25	Battery	48	48
Behind the meter DG	-99	MUNI/QF	99	99
Net Load	**1512**	Solar	51	0
Transmission Losses	33	Existing 20-minute Demand Response	0	0
Pumps	0	Mothballed	0	0
Load + Losses + Pumps	**1545**	**Total**	**892**	**841**

Herndon LCR Sub-area Hourly Profiles

Figure 3.3-64 illustrates the forecast 2027 profile for the peak day for the Herndon sub-area with the Category P6 normal and emergency load serving capabilities without local resources. The chart also includes an estimated amount of energy storage that can be added to this local area from charging restriction perspective. Figure 3.3-65 illustrates the forecast 2027 hourly profile for Herndon sub-area with the Category P6 emergency load serving capability without local resources.

Figure 3.3-64 Herndon LCR Sub-area 2027 Peak Day Forecast Profiles

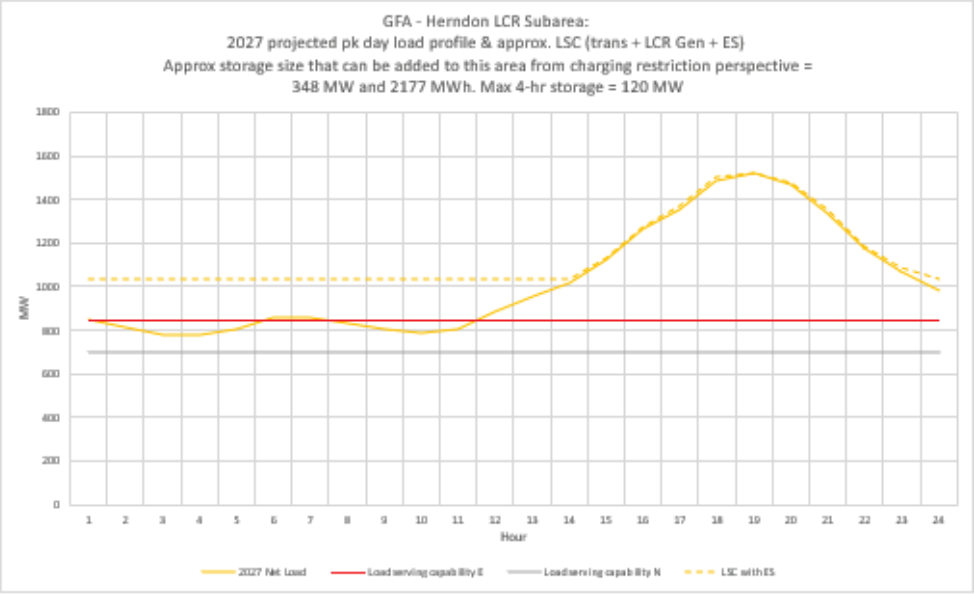

Figure 3.3-65 Herndon LCR Sub-area 2027 Forecast Hourly Profiles

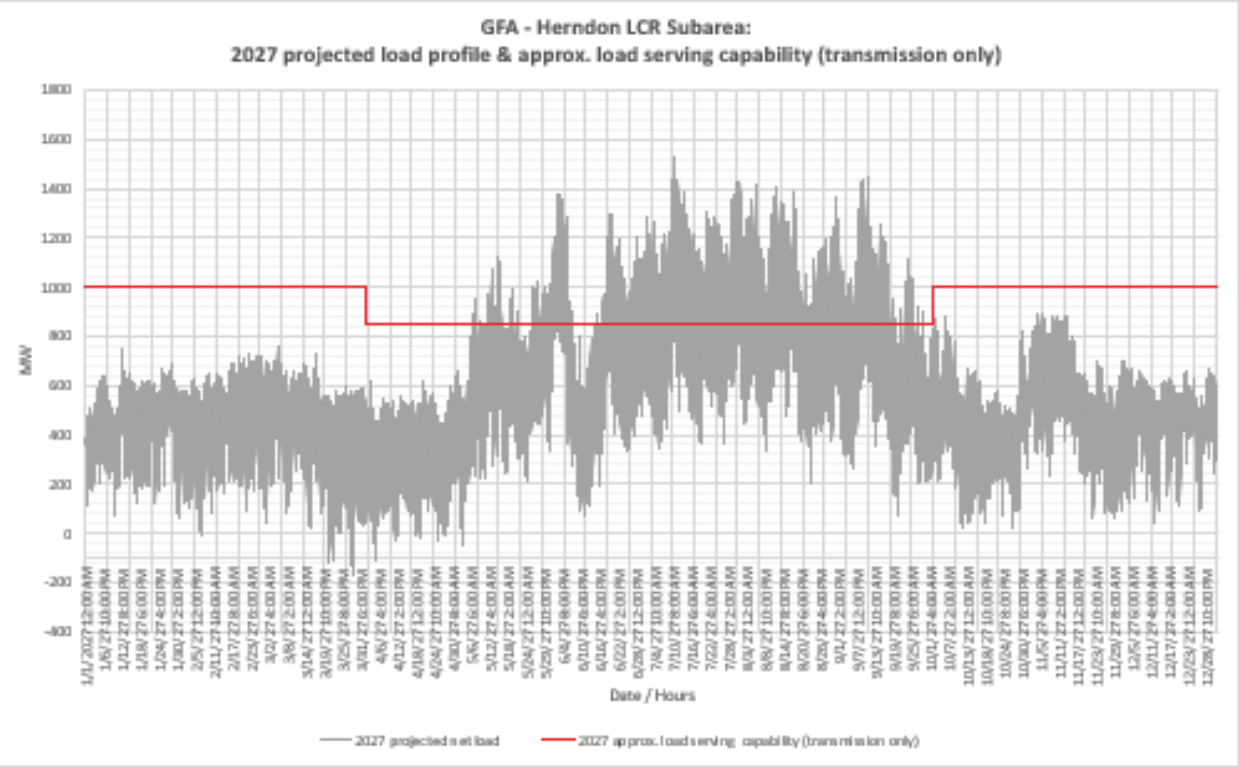

Herndon LCR Sub-area Requirement

Table 3.3-55 identifies the sub-area LCR requirements. The LCR Requirement for a Category P6 contingency is 680 MW.

Table 3.3-55 Herndon LCR Sub-area Requirements

Year	Limit	Category	Limiting Facility	Contingency	LCR (MW) (Deficiency)
2027	First limit	P6	Herndon #3 230/115 kV Transformer Bank	Herndon 230/115 kV Bank 1 and Herndon 230/115 kV Bank 2	680

Effectiveness factors:

For other helpful procurement information please read procedure 2210Z Effectiveness Factors under 7430 posted at: http://www.caiso.com/Documents/2210Z.pdf

3.3.6.9 *Fresno Overall area*

Fresno LCR Area Diagram

Figure 3.3-66 Fresno LCR area

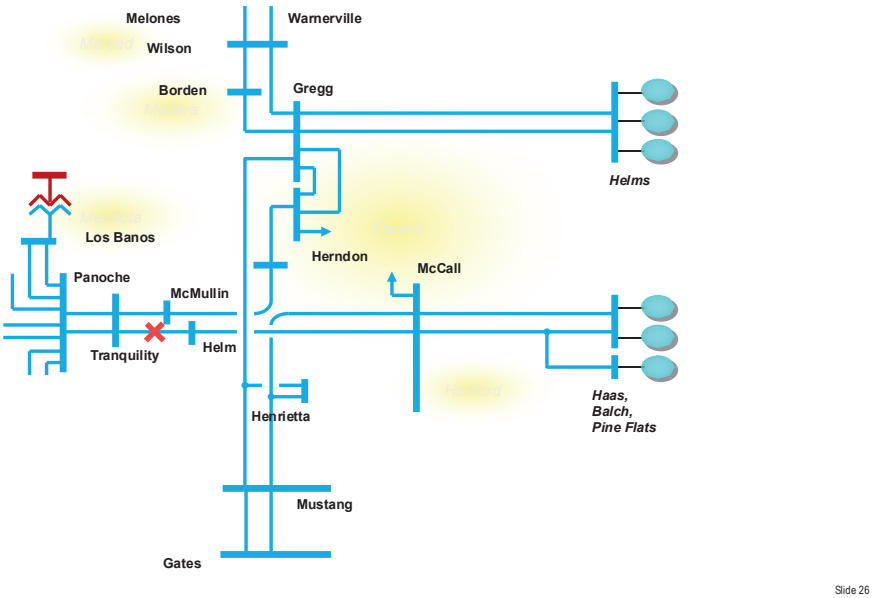

Fresno Overall LCR area Load and Resources

Table 3.3-41 provides the forecast load and resources in Fresno LCR area in 2027. The list of generators within the LCR area are provided in Attachment A.

Fresno Overall LCR area Hourly Profiles

Figure 3.3-67 illustrates the forecast 2027 profile for the peak day for the Fresno Overall sub-area with the Category P6 normal and emergency load serving capabilities without local resources. The chart also includes an estimated amount of energy storage that can be added to this local area from charging restriction perspective. Figure 3.3-68 illustrates the forecast 2027 hourly profile for Fresno Overall sub-area with the Category P6 emergency load serving capability without local resources.

Figure 3.3-67 Fresno LCR area 2027 Peak Day Forecast Profiles

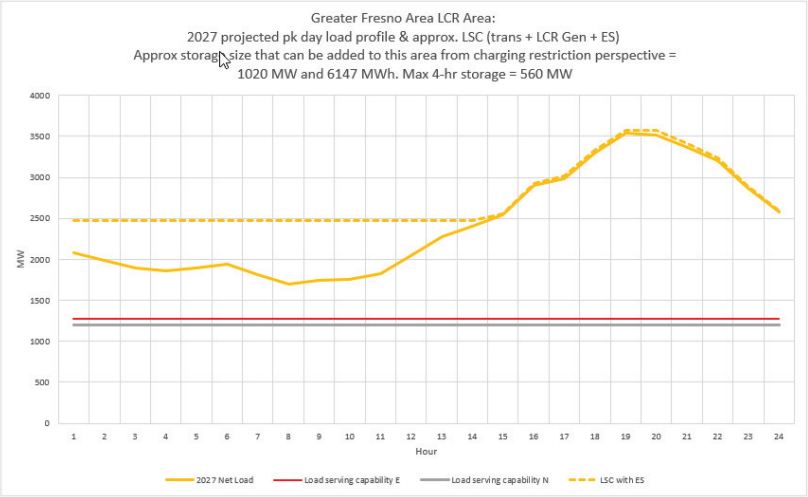

Figure 3.3-68 Fresno LCR area 2027 Forecast Hourly Profiles

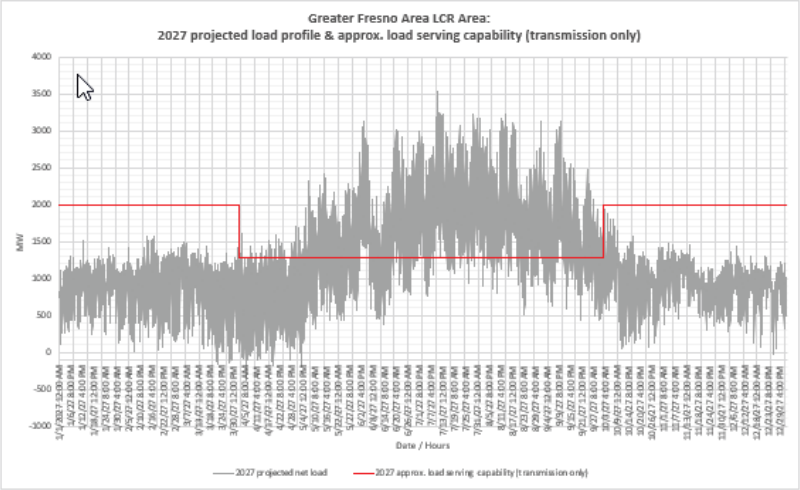

Fresno Overall LCR Area Requirement

Table 3.3-56 identifies the area LCR requirements. The LCR Requirement for a Category P6 contingency is 2090 MW.

Table 3.3-56 Fresno Overall LCR Area Requirements

Year	Limit	Category	Limiting Facility	Contingency	LCR (MW) (Deficiency)
2027	First limit	P6	Kingsburg-Contadina 115 kV line	Mc Call-Helm 230 kV Line and Mc Call-Mustang 230 kV line	2090

Effectiveness factors:

For most helpful procurement information please read procedure 2210Z Effectiveness Factors under 7430 posted at: http://www.caiso.com/Documents/2210Z.pdf

Changes compared to last year's results

Compared with 2026 the load forecast decreased by 78 MW and the LCR need decreased by 10 MW mostly due to load forecast decreases.

3.3.7 Kern Area

3.3.7.1 *Area Definition:*

The transmission facilities coming into the Kern PP sub-area are:

Midway-Kern PP #1 230 kV Line

Midway-Kern PP #3 230 kV Line

Midway-Kern PP #4 230 kV Line

Famoso-Lerdo 115 kV Line (Seasonal Open)

Adobe Switching Station #1 115 kV Tap (Normal Open)

Wasco-Famoso 70 kV Line (Seasonal Open)

Kern-Magunden 70 kV Line (Seasonal Open)

Copus-Old River 70 kV Line (Seasonal Open)

Copus-Old River 70 kV Line (Normal Open)

The substations that delineate the Kern-PP sub-area are:

Midway 230 kV is out and Bakersfield 230 kV is in

Midway 230 kV is out and Kern PP 230 kV is in

Midway 230 kV is out and Kern PP 230 kV is in

Famoso 115 kV is out and Cawelo 115 kV is in

Adobe Switching Station 115 kV is out and Wheeler Ridge Junction 115 kV is in

Wasco 70 kV is out and Mc Farland 70 kV is in

Magunden 70 kV is out and Bakersfield Junction 70 kV is in

Copus 70 kV is out and South Kern Solar 70 kV is in

Lakeview 70 kV is out and San Emidio Junction 70 kV is in

Kern LCR Area Diagram

Figure 3.3-69 Kern LCR Sub-area

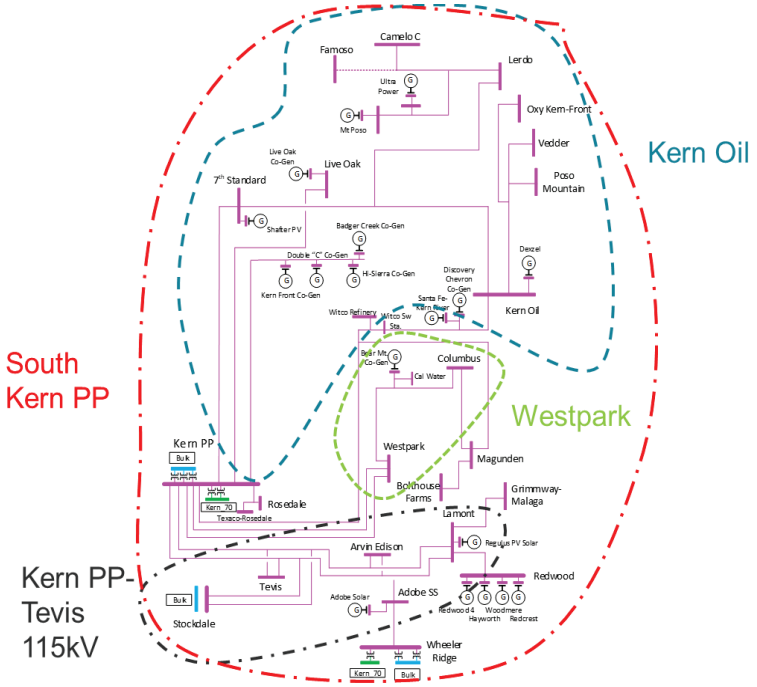

Kern LCR Area Load and Resources

Table 3.3-57 provides the forecast load and resources in Kern LCR Area in 2027. The list of generators within the LCR area are provided in Attachment A.

In year 2027 the estimated time of local area peak is 19:20 PM.

At the local area peak time the estimated, ISO metered, solar output is 0.00%.

If required, all non-solar technology type resources are dispatched at NQC.

Table 3.3-57 Kern LCR Area 2027 Forecast Load and Resources

Load (MW)		**Generation (MW)**	**Aug NQC**	**At Peak**
Gross Load	1176	Market/Net Seller	367	367
AAEE	-16	Battery	0	0
Behind the meter DG	-78	MUNI/QF	10	10
Net Load	**1082**	Solar	67	0
Transmission Losses	10	Existing 20-minute Demand Response	9	9
Pumps	0	Mothballed	0	0
Load + Losses + Pumps	**1092**	**Total**	**453**	**386**

Approved transmission projects modeled

Wilson-Oro Loma 115 kV Line Reconductoring

3.3.7.2 *Kern Power-Tevis Sub Area*

Kern Power-Tevis is a sub-area of the Kern LCR area.

Kern Power-Tevis Sub-area Diagram

Please see Figure 3.3-69 for Kern PWR-Tevis sub-area diagram.

Kern Power-Tevis LCR Sub-area Load and Resources

Table 3.3-58 provides the forecast load and resources in Kern Power-Tevis LCR sub-area. The list of generators within the LCR sub-area are provided in Attachment A.

Table 3.3-58 Kern Power-Tevis LCR Sub-area 2027 Forecast Load and Resources

Load (MW)		Generation (MW)	Aug NQC	At Peak
Gross Load	168	Market/Net Seller	0	0
AAEE	-2	Battery	0	0
Behind the meter DG	-15	MUNI/QF	0	0
Net Load	**151**	Solar	48	0
Transmission Losses	0	Existing 20-minute Demand Response	0	0
Pumps	0	Mothballed	0	0
Load + Losses + Pumps	**151**	**Total**	**48**	**0**

Kern Power-Tevis LCR Sub-area Hourly Profiles

Figure 3.3-70 illustrates the forecast 2027 profile for the peak day for the Kern Power-Tevis LCR sub-area with the Category P2-1 normal and emergengy load serving capabilities without local resources. The chart also includes an estimated amount of energy storage that can be added to this local area from charging restriction perspective. Figure 3.3-71 illustrates the forecast 2027 hourly profile for Kern Power-Tevis LCR sub-area with the Category P2-1 emergency load serving capability without local resources.

Figure 3.3-70 Kern Power-Tevis LCR Sub-area 2027 Peak Day Forecast Profiles

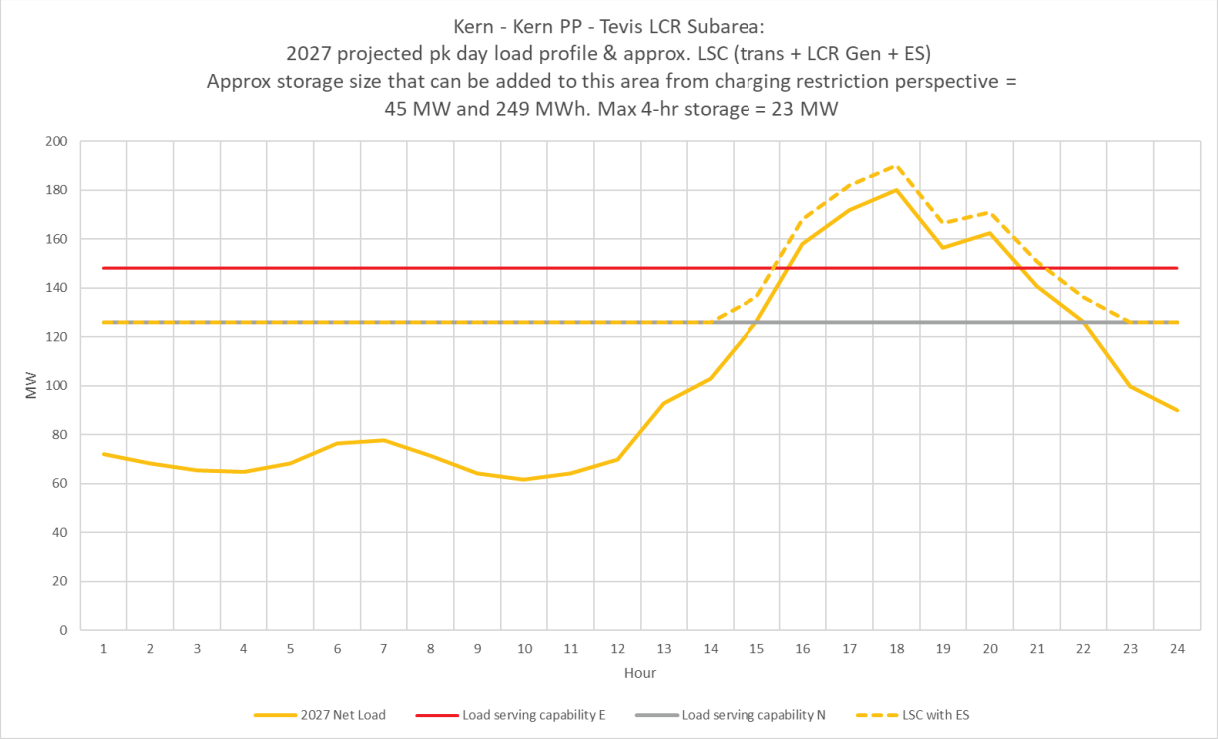

Figure 3.3-71 Kern Power-Tevis LCR Sub-area 2027 Forecast Hourly Profiles

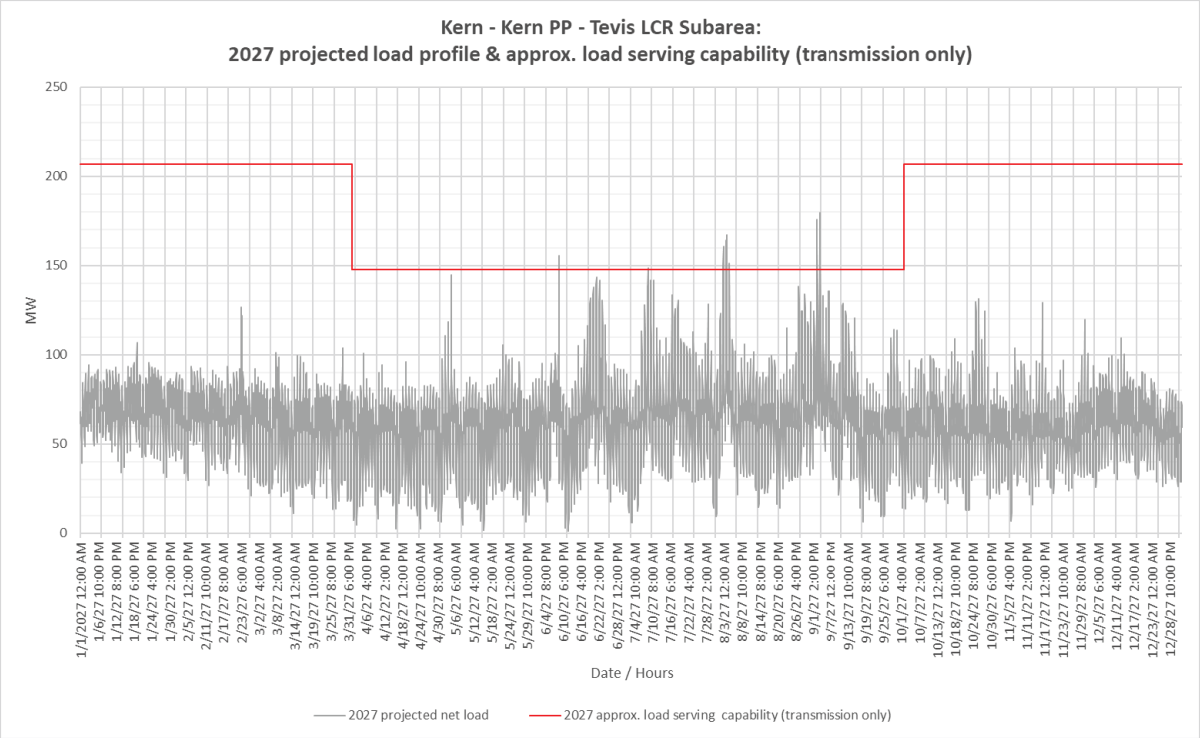

Kern Power-Tevis LCR Sub-area Requirement

Table 3.3-59 identifies the sub-area LCR requirements. The LCR requirement for Category P7 contingency is 20 MW.

Table 3.3-59 Kern Power-Tevis LCR Sub-area Requirements

Year	Category	Limiting Facility	Contingency	LCR (MW) (Deficiency)
2027	P2-1	Kern Power – Tevis Jct 115 kV Line	Kern-Stockdale-Lamont #1 115 kV Line	20 (0 NQC; 20 Peak)

3.3.7.3 *Westpark Sub-area*

Westpark is a sub-area of the Kern LCR area.

Westpark LCR Sub-area Diagram

Please see Figure 3.3-69 for Westpark sub-area diagram.

Westpark LCR Sub-area Load and Resources

Table 3.3-60 provides the forecast load and resources in Westpark LCR sub-area. The list of generators within the LCR sub-area are provided in Attachment A.

Table 3.3-60 Westpark LCR Sub-area 2027 Forecast Load and Resources

Load (MW)		Generation (MW)	Aug NQC	At Peak
Gross Load	143	Market/Net Seller	49	49
AAEE	-3	Battery	0	0
Behind the meter DG	-10	MUNI/QF	0	0
Net Load	**130**	Solar	0	0
Transmission Losses	0	Existing 20-minute Demand Response	0	0
Pumps	0	Mothballed	0	0
Load + Losses + Pumps	**130**	**Total**	**49**	**49**

Westpark LCR Sub-area Hourly Profiles

Figure 3.3-72 illustrates the forecast 2027 profile for the peak day for the Westpark LCR sub-area with the Category P3 normal and emergengy load serving capabilities without local resources. The chart also includes an estimated amount of energy storage that can be added to this local area from charging restriction perspective. Figure 3.3-73 illustrates the forecast 2027 hourly profile for Westpark LCR sub-area with the Category P7 emergency load serving capability without local resources.

Figure 3.3-72 Westpark LCR Sub-area 2027 Peak Day Forecast Profiles

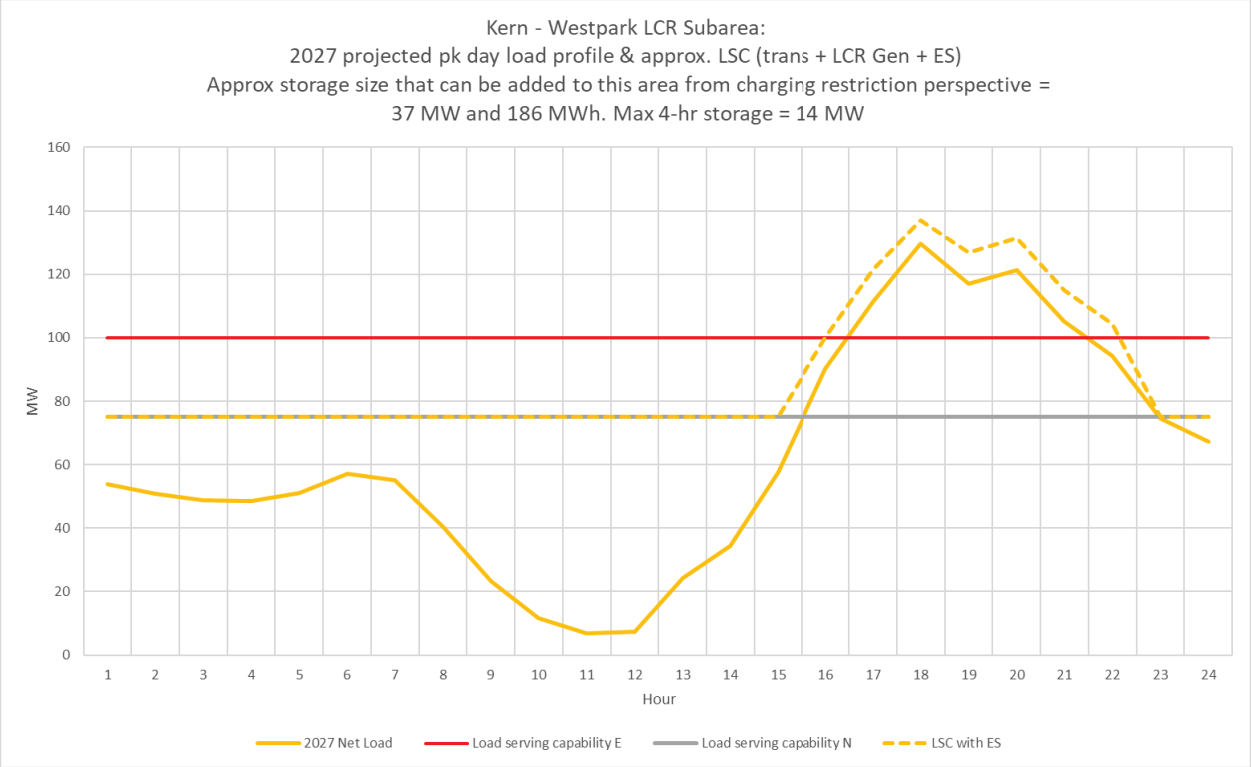

Figure 3.3-73 Westpark LCR Sub-area 2027 Forecast Hourly Profiles

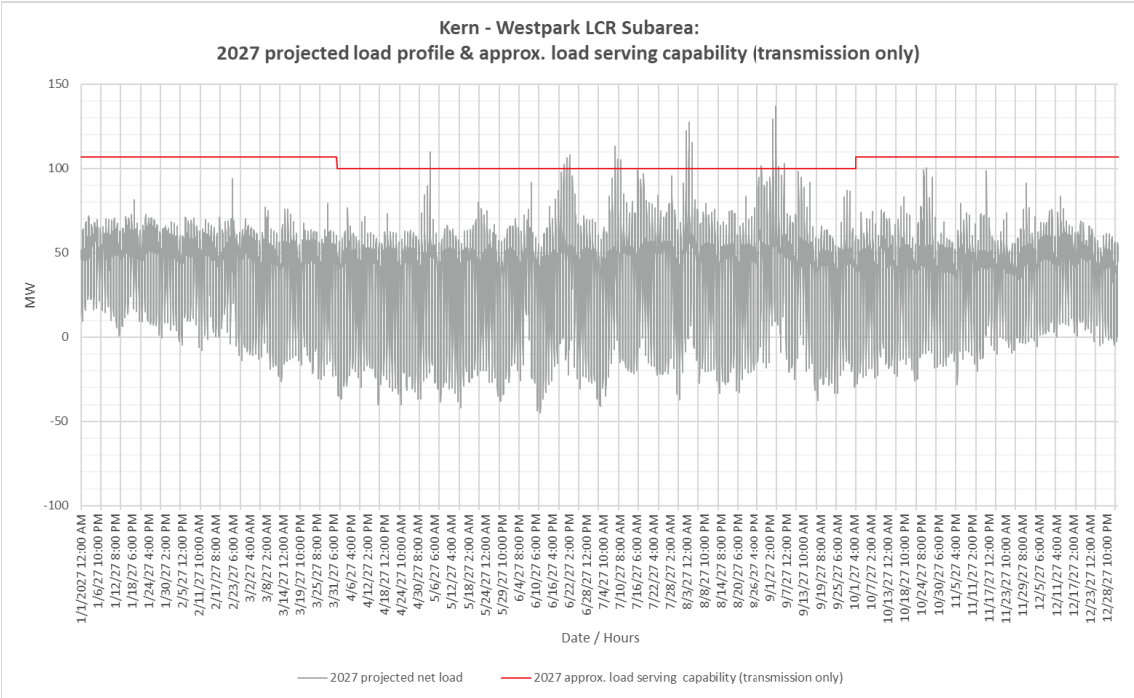

Westpark LCR Sub-area Requirement

Table 3.3-61 identifies the sub-area LCR requirements. The LCR requirement for Category P7 contingency is 37 MW.

Table 3.3-61 Westpark LCR Sub-area Requirements

Year	Category	Limiting Facility	Contingency	LCR (MW) (Deficiency)
2027	P7	Magunden–Magunden Jct 115 kV Line	Kern PP-Westpark No. 1 & 2 115 kV Lines	37

Effectiveness factors:

All units within the Westpark Sub-area have the same effectiveness factor.

For most helpful procurement information please read procedure 2210Z Effectiveness Factors under 7450 posted at: http://www.caiso.com/Documents/2210Z.pdf

3.3.7.4 *Kern Oil Sub-area*

Kern Oil is a sub-area of the Kern LCR area.

Kern Oil LCR Sub-area Diagram

Please see Figure 3.3-69 for Kern Oil sub-area diagram.

Kern Oil LCR Sub-area Load and Resources

Table 3.3-62 provides the forecast load and resources in Kern Oil LCR sub-area. The list of generators within the LCR sub-area are provided in Attachment A.

Table 3.3-62 Kern Oil LCR Sub-area 2027 Forecast Load and Resources

Load (MW)		Generation (MW)	Aug NQC	At Peak
Gross Load	347	Market/Net Seller	109	109
AAEE	-3	Battery	0	0
Behind the meter DG	-14	MUNI/QF	9	9
Net Load	**330**	Solar	7	0
Transmission Losses	2	Existing 20-minute Demand Response	0	0
Pumps	0	Mothballed	0	0
Load + Losses + Pumps	**332**	**Total**	**125**	**118**

Kern Oil LCR Sub-area Hourly Profiles

Figure 3.3-74 illustrates the forecast 2027 profile for the peak day for the Kern Oil LCR sub-area with the Category P6 normal and emergengy load serving capabilities without local resources. The chart also includes an estimated amount of energy storage that can be added to this local area from charging restriction perspective. Figure 3.3-75 illustrates the forecast 2027 hourly profile for Kern Oil LCR sub-area with the Category P6 emergency load serving capability without local resources.

Figure 3.3-74 Kern Oil LCR Sub-area 2027 Peak Day Forecast Profiles

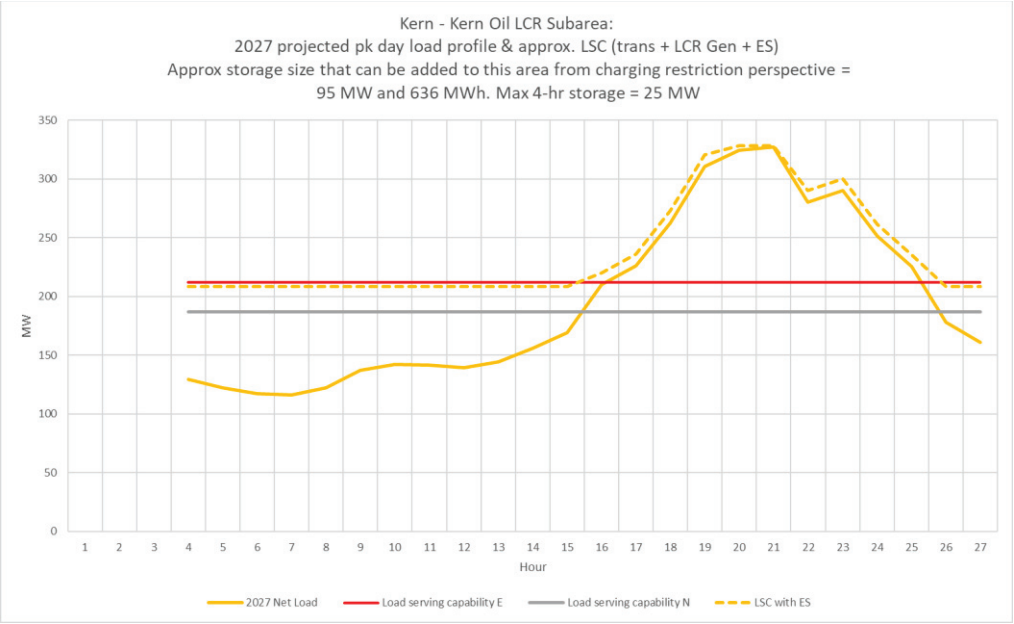

Figure 3.3-75 Kern Oil LCR Sub-area 2027 Forecast Hourly Profiles

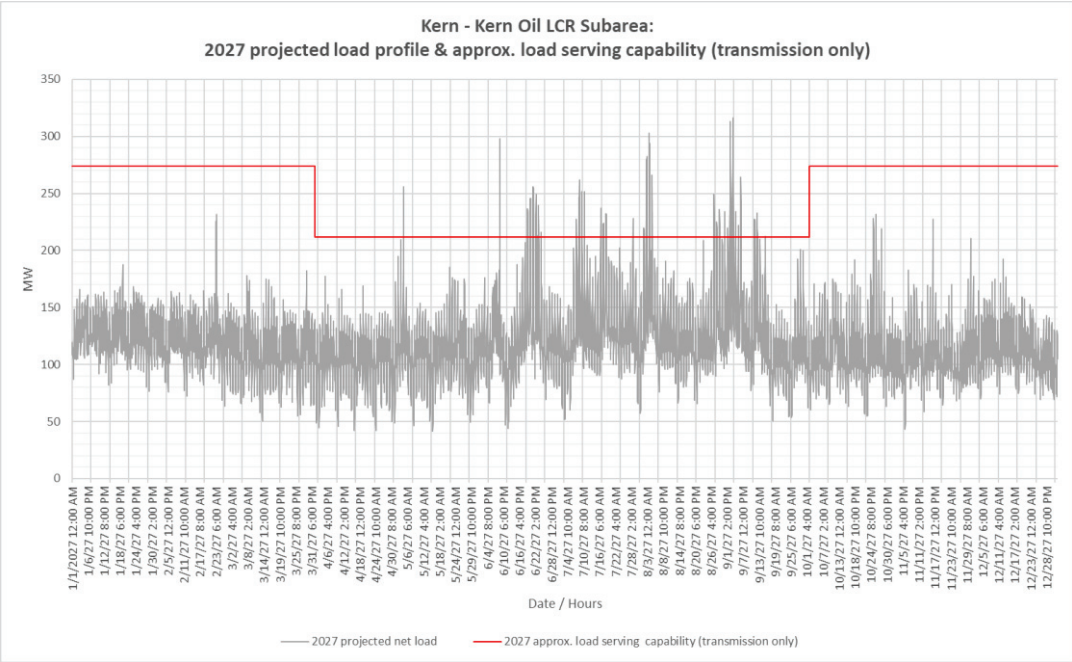

Kern Oil LCR Sub-area Requirement

Table 3.3-63 identifies the sub-area LCR requirements. The LCR requirement for Category P6 contingency is 113 MW.

Table 3.3-63 Kern Oil LCR Sub-area Requirements

Year	Category	Limiting Facility	Contingency	LCR (MW) (Deficiency)
2027	P6	Kern Oil Jct –Kernwater 115 kV Line	7th Standard – Kern 115 kV line & Kern PP-Live Oak 115 kV Line	113

Effectiveness factors:

All units within the Kern Oil sub-area have the same effectiveness factor.

For most helpful procurement information please read procedure 2210Z Effectiveness Factors under 7450 posted at: http://www.caiso.com/Documents/2210Z.pdf

3.3.7.5 *South Kern PP Sub-area*

South Kern PP is sub-area of the Kern LCR area.

South Kern PP LCR Sub-area Diagram

Please see Figure 3.3-69 for South Kern PP area diagram.

South Kern PP LCR Sub-area Load and Resources

Refer to Table 3.3-57 Kern Area Load and Resources table.

South Kern PP LCR Sub-area Hourly Profiles

Figure 3.3-76 illustrates the forecast 2027 profile for the peak day for the South Kern PP LCR sub-area with the Category P6 normal and emergengy load serving capabilities without local resources. The chart also includes an estimated amount of energy storage that can be added to this local area from charging restriction perspective. Figure 3.3-77 illustrates the forecast 2027 hourly profile for South Kern PP LCR sub-area with the Category P6 emergency load serving capability without local resources.

Figure 3.3-76 South Kern PP LCR Sub-area 2027 Peak Day Forecast Profiles

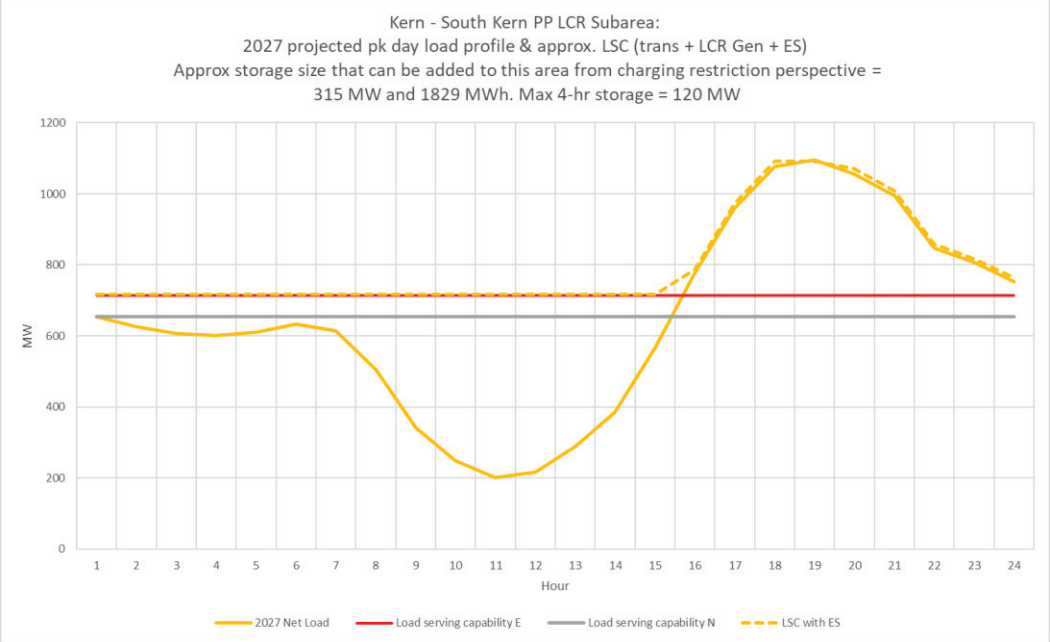

Figure 3.3-77 South Kern PP LCR Sub-area 2027 Forecast Hourly Profiles

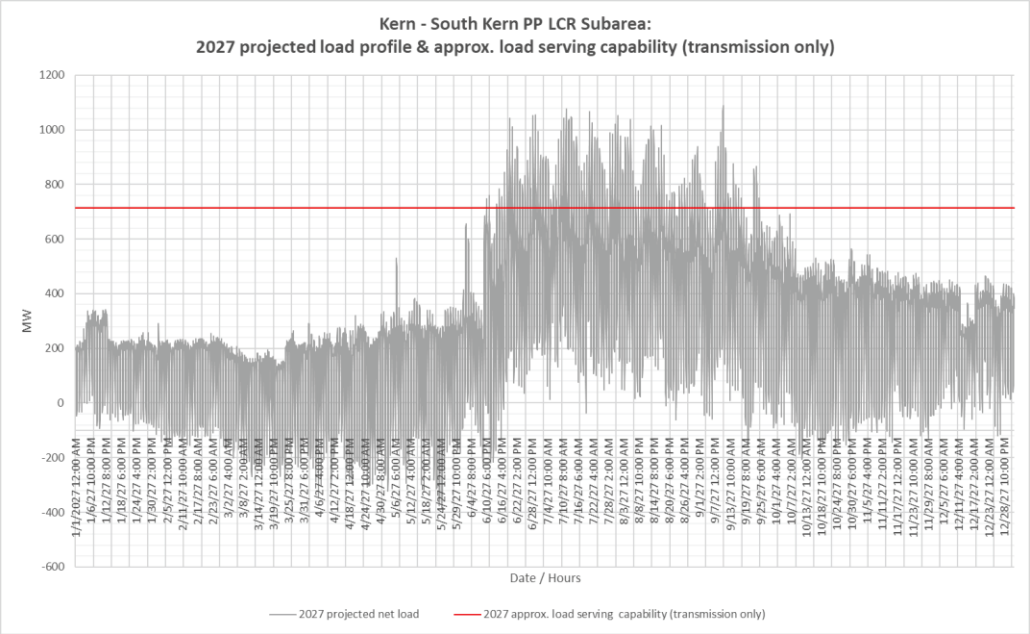

South Kern PP LCR Sub-area Requirement

Table 3.3-64 identifies the sub-area LCR requirements. The LCR requirement for Category P6 contingency is 315 MW.

Table 3.3-64 South Kern PP LCR Sub-area Requirements

Year	Category	Limiting Facility	Contingency	LCR (MW) (Deficiency)
2027	P6	Kern 230/115 kV T/F # 5	Kern 230/115 kV T/F # 3 & Kern 230/115 kV T/F # 4	315

Effectiveness factors:

All units within the South Kern PP sub-area have the same effectiveness factor.

For most helpful procurement information please read procedure 2210Z Effectiveness Factors under 7450 posted at: http://www.caiso.com/Documents/2210Z.pdf

3.3.7.6 *Kern Area Overall Requirements*

Kern LCR Area Overall Requirement

Table 3.3-65 identifies the limiting facility and contingency that establishes the Kern Area 2027 LCR requirements. The LCR requirement for Category P6 (Multiple Contingency) is 315 MW.

Table 3.3-65 Kern Overall LCR Sub-area Requirements

Year	Category	Limiting Facility	Contingency	LCR (MW) (Deficiency)
2027	P6	Aggregate of Sub-areas.		315

Kern Overall LCR Area Hourly Profile

Refer to South Kern PP LCR area profiles.

Changes compared to last year's results

The 2027 load forecast has increased by 121 MW and the overall Kern resource requirements have decreased by 137 MW due to new transmission projects, mostly Kern 115 kV Reinforcement project.

3.3.8 Big Creek/Ventura Area

3.3.8.1 *Area Definition:*

The transmission tie lines into the Big Creek/Ventura Area are:

Antelope #1 500/230 kV Transformer

Antelope #2 500/230 kV Transformer

Sylmar - Pardee 230 kV #1 and #2 Lines

Vincent - Pardee 230 kV #2 Line

Vincent - Santa Clara 230 kV Line

The substations that delineate the Big Creek/Ventura Area are:

Antelope 500 kV is out Antelope 230 kV is in

Antelope 500 kV is out Antelope 230 kV is in

Sylmar is out Pardee is in

Vincent is out Pardee is in

Vincent is out Santa Clara is in

Big Creek/Ventura LCR Area Diagram

Figure 3.3-78 Big Creek/Ventura LCR Area

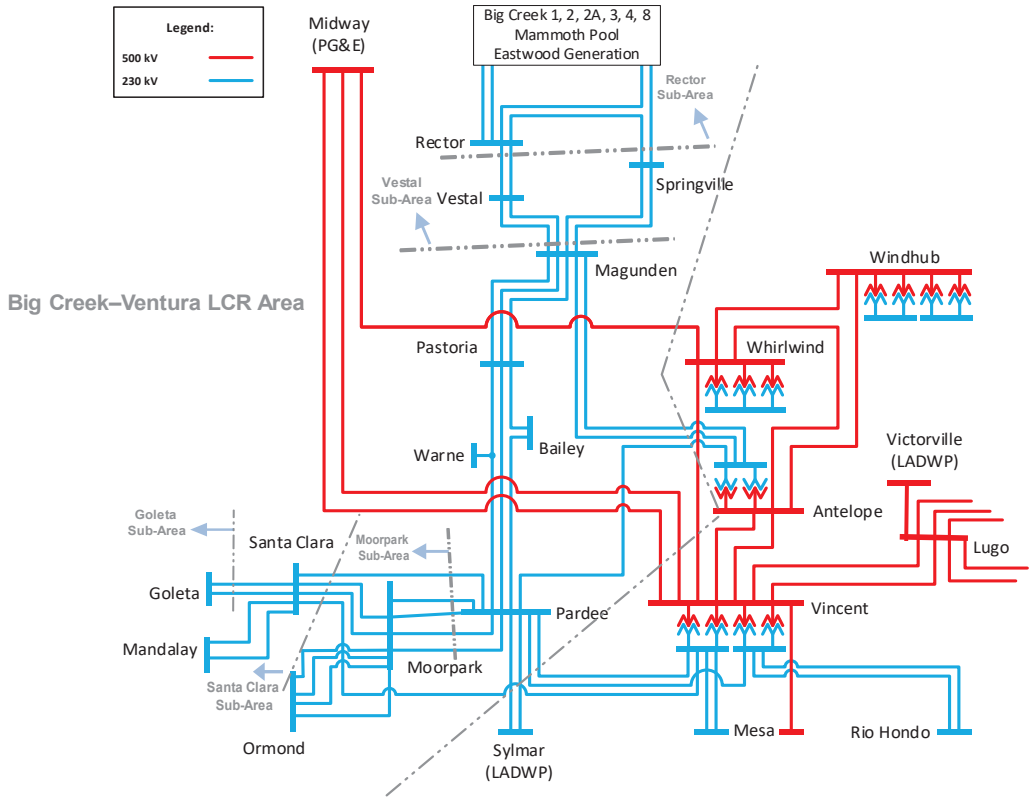

Big Creek/Ventura LCR Area Load and Resources

Table 3.3-66 provides the forecast load and resources in the Big Creek/Ventura LCR Area in 2027. The list of generators within the LCR area are provided in Attachment A.

In year 2027 the estimated time of local area peak is 5:00 PM (PDT).

At the local area peak time the estimated ISO-metered solar output is about 60%.

If required, all non-solar technology type resources are dispatched at NQC.

Table 3.3-66 Big Creek/Ventura LCR Area 2027 Forecast Load and Resources

Load (MW)		Generation (MW)	Aug NQC	At Peak
Gross Load	3949	Market/Net Seller/Wind	2588	2588
AAEE	-69	Battery/Hybrid	1989	1989
Behind the meter DG	0	MUNI/QF	410	410
Net Load	**3880**	Solar	378	378
Transmission Losses	95	Demand Response	63	63
Pumps	234	Mothballed	0	0
Load + Losses + Pumps	**4209**	**Total**	**5428**	**5428**

Approved transmission projects modeled:

- Pardee- Sylmar 230kV rating increase project (ISD- June 2029)

3.3.8.2 *Rector Sub-area*

No LCR need is identified in the Rector sub-area.

3.3.8.3 *Vestal Sub-area*

No LCR need is identified in the larger Vestal sub-area.

3.3.8.4 *Goleta Sub-area*

Goleta is a sub-area of the Santa Clara sub-area. LCR need in Goleta is satisfied by the need in the larger Santa Clara sub-area.

3.3.8.5 *Santa Clara Sub-area*

Santa Clara is a sub-area of the Big Creek/Ventura LCR area.

Santa Clara LCR Sub-area Diagram

Figure 3.3-79 Santa Clara LCR Sub-area

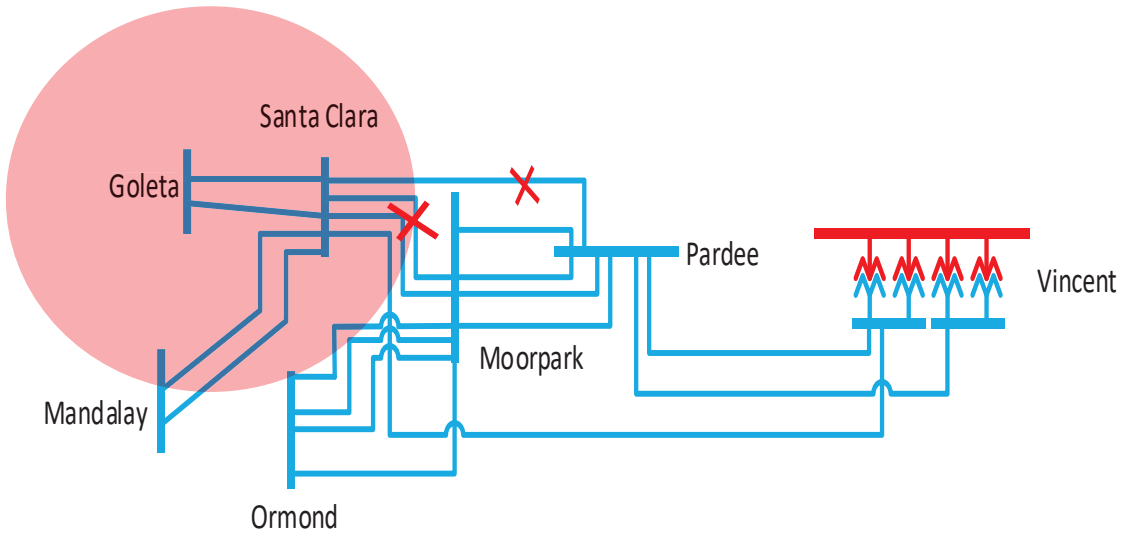

Santa Clara LCR Sub-area Load and Resources

Table 3.3-67 provides the forecast load and resources in Santa Clara LCR sub-area in 2027. The list of generators within the LCR sub-area are provided in Attachment A.

Table 3.3-67 Santa Clara LCR Sub-area 2027 Forecast Load and Resources

Load (MW)		**Generation (MW)**	**Aug NQC**	**At Peak**
Gross Load	836	Market/Net Seller	165	165
AAEE	-14	Battery	201	201
Behind the meter DG	N/A	MUNI/QF	87	87
Net Load	**822**	Solar	0	0
Transmission Losses	4	Existing Demand Response	7	7
Pumps	0	Mothballed	0	0
Load + Losses + Pumps	**826**	**Total**	**460**	**460**

Santa Clara LCR Sub-area Hourly Profiles

Figure 3.3-80 illustrates the forecast 2027 annual load profile in the Santa Clara LCR sub-area with the Category P1/P7 voltage stability related load serving capabily without local capacity resources. Figure 3.3-81 provides the load shape for the peak load day, estimated energy storage maximum capacity and energy based on area maximum charging capability under the most critical contingency as well as estimated 1 for 1 replacement with four-hour capacity battery.

Figure 3.3-80 Santa Clara LCR Sub-area 2027 Annual Load Profile with Estimated Transmission Only Load Serving Capability

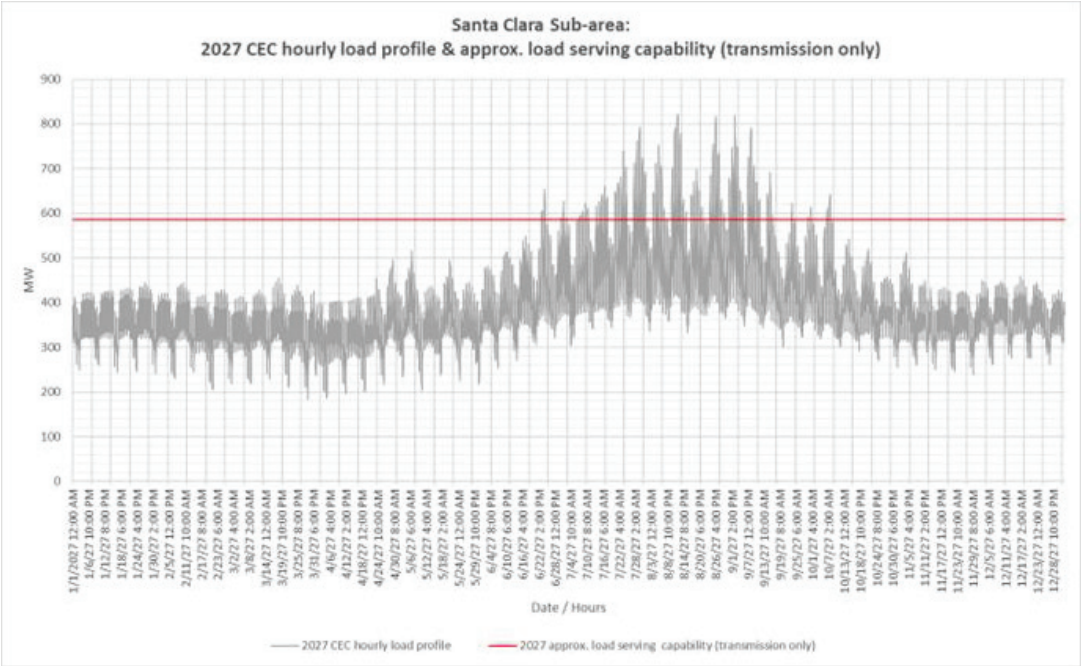

Figure 3.3-81 Santa Clara LCR Sub-area 2027 Load Shape and Estimated Maximum Energy Storage Capacity and Energy Based on Charging Capability Under Critical Contingency

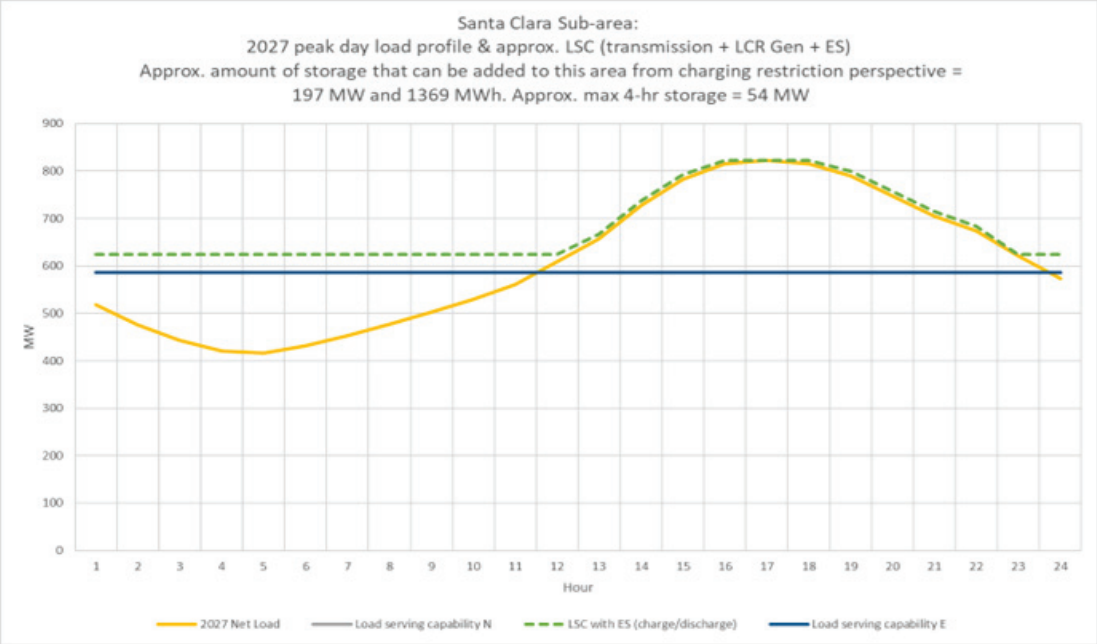

Santa Clara LCR Sub-area Requirement

Table 3.3-68 identifies the sub-area requirements. The LCR requirement for Category P1 followed by P7 contingency is 236 MW.

Table 3.3-68 Santa Clara LCR Sub-area Requirements

Year	Limit	Category	Limiting Facility	Contingency	LCR (MW) (Deficiency)
2027	First Limit	P1 + P7	Voltage collapse	Pardee - Santa Clara 230 kV followed by Moorpark - Santa Clara #1 & #2 230 kV	236

Effectiveness factors:

For helpful procurement information please read procedure 2210Z Effectiveness Factors under 7550 and 7680 posted at: http://www.caiso.com/Documents/2210Z.pdf

3.3.8.6 *Big Creek/Ventura Overall*

Big Creek/Ventura LCR Sub-area Hourly Profiles

Figure 3.3-82 illustrates the forecast 2027 annual load profile in the Big Creek/Ventura LCR area with the Category P1/P7 voltage stability related load serving capabilities without local capacity resources. The normal and emergency ratings for the limiting element are the same. Figure 3.3-83 provides the load shape for the peak load day, estimated energy storage maximum capacity and energy based on area maximum charging capability under the most critical contingency as well as estimated 1 for 1 replacement with four-hour capacity battery.

Figure 3.3-82 Big Creek/Ventura LCR area 2027 Annual Load Profile with Estimated Transmission Only Load Serving Capability

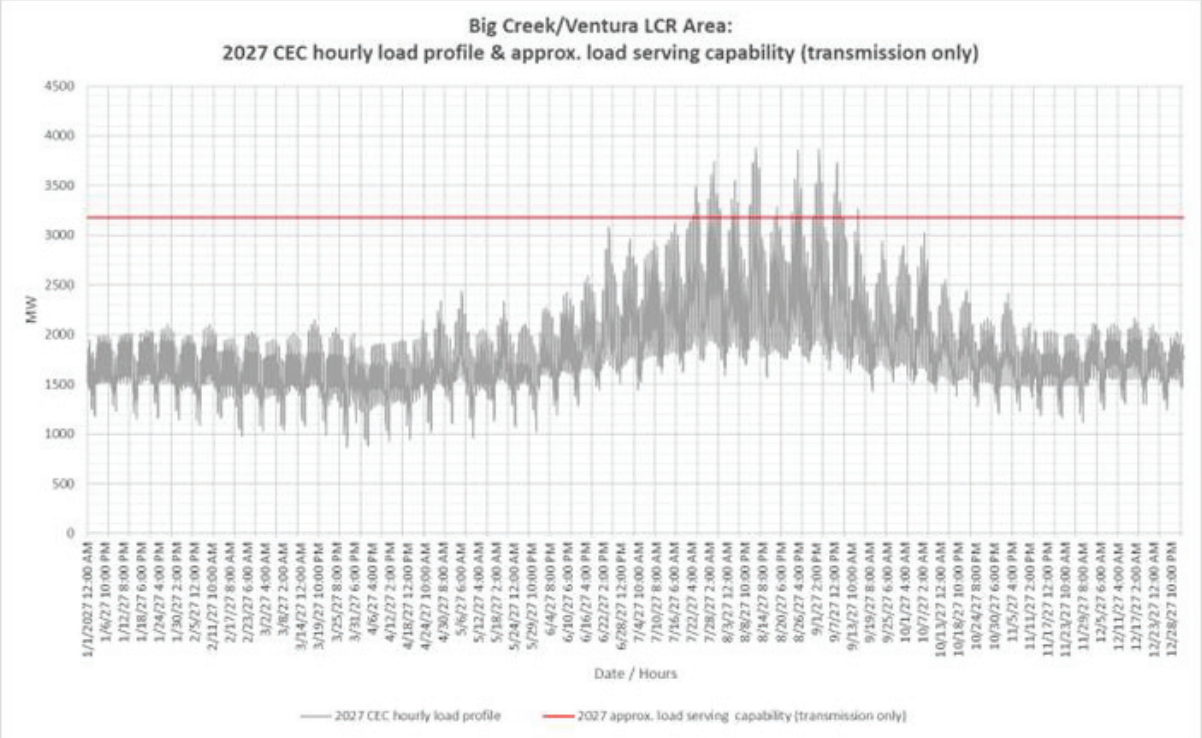

Figure 3.3-83 Big Creek/Ventura LCR area 2027 Load Shape and Estimated Maximum Energy Storage Capacity and Energy Based on Charging Capability Under Critical Contingency

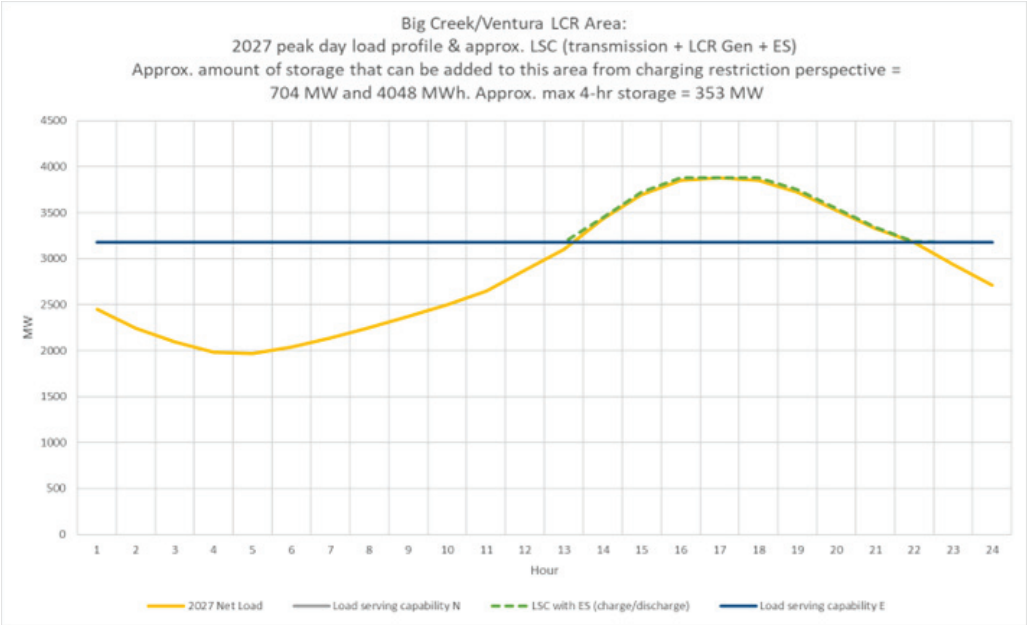

Big Creek/Ventura LCR area Requirement

Table 3.3-69 identifies the area LCR requirements. The LCR requirement for Category P1 followed by P7 contingency is 704 MW.

Table 3.3-69 Big Creek/Ventura LCR area Requirements

Year	Limit	Category	Limiting Facility	Contingency	LCR (MW) (Deficiency)
2027	First Limit	P1+P7	Voltage collapse	Lugo - Victorville 500 kV line followed by one of the Sylmar - Pardee #1 and #2 230 kV lines	704

Effectiveness factors:

For helpful procurement information please read procedure 2210Z Effectiveness Factors under 7500, 7510, 7550 and 7680 posted at: http://www.caiso.com/Documents/2210Z.pdf

Changes compared to last year's results

Compared with the results for 2026, the load forecast is down by 590 MW and the LCR decreased by 665 MW mainly due to decrease in load and change in the limiting contingency.

3.3.9 LA Basin Area

3.3.9.1 *Area Definition:*

The transmission tie lines into the LA Basin Area are:

San Onofre - San Luis Rey #1, #2, and #3 230 kV Lines

San Onofre - Talega #2 230 kV Line

San Onofre – Capistrano #1 230 kV Line

Lugo - Mira Loma #2 & #3 500 kV Lines

Lugo - Rancho Vista #1 500 kV Line

Vincent – Mesa 500 kV Line

Sylmar - Eagle Rock 230 kV Line

Sylmar - Gould 230 kV Line

Vincent - Mesa #1 & #2 230 kV Lines

Vincent - Rio Hondo #1 & #2 230 kV Lines

Devers - Red Bluff 500 kV #1 and #2 Lines

Mirage – Coachella Valley # 1 230 kV Line

Mirage - Ramon # 1 230 kV Line

Mirage - Julian Hinds 230 kV Line

The substations that delineate the LA Basin Area are:

San Onofre is in San Luis Rey is out

San Onofre is in Talega is out

San Onofre is in Capistrano is out

Mira Loma is in Lugo is out

Rancho Vista is in Lugo is out

Eagle Rock is in Sylmar is out

Gould is in Sylmar is out

Mesa is in Vincent is out

Mesa is in Vincent is out

Rio Hondo is in Vincent is out

Devers is in Red Bluff is out

Mirage is in Coachella Valley is out

Mirage is in Ramon is out

Mirage is in Julian Hinds is out

LA Basin LCR Area Diagram

Figure 3.3-84 LA Basin LCR Area

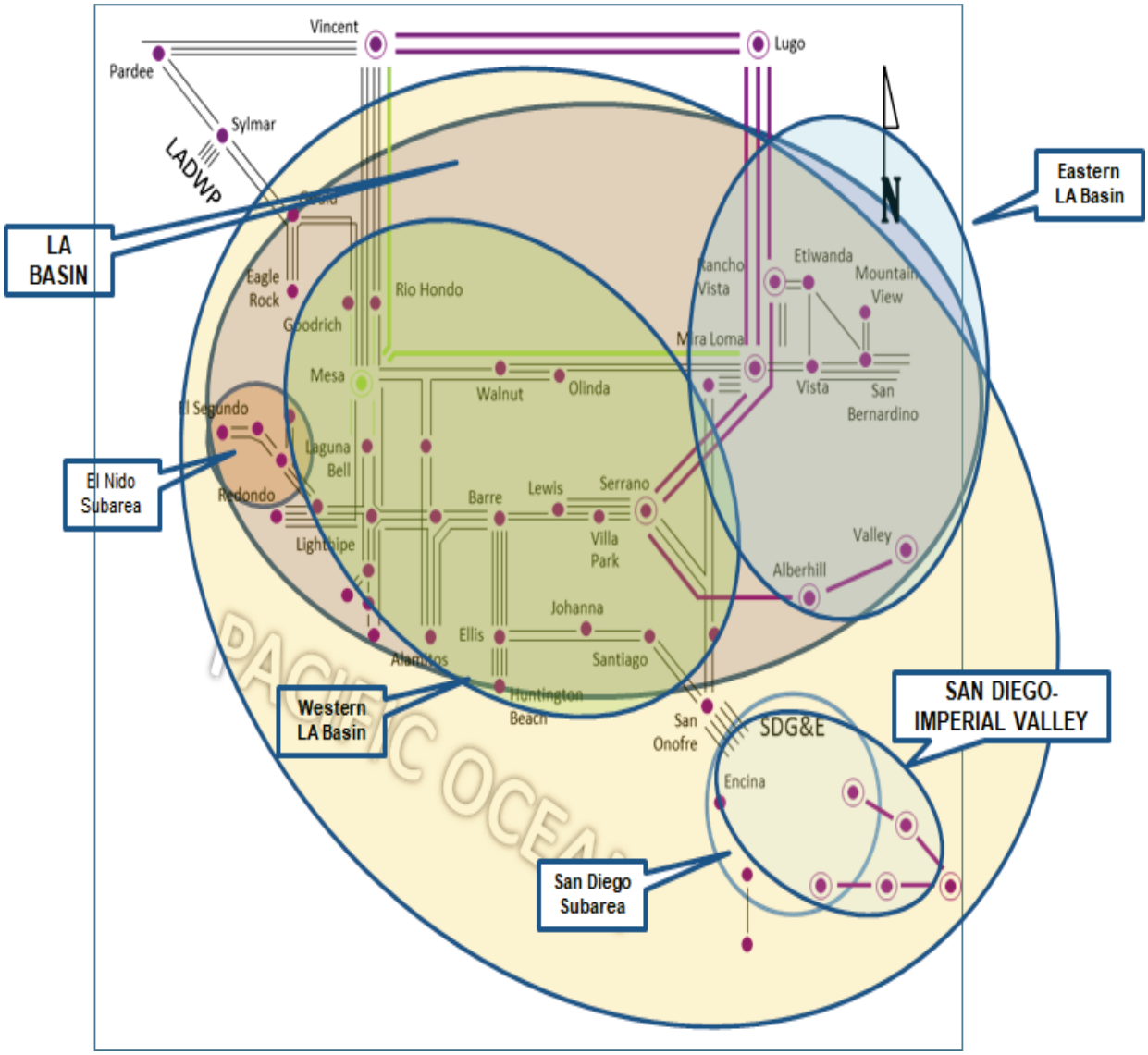

LA Basin LCR Area Load and Resources

Table 3.3-70 provides the forecast load and resources in the LA Basin LCR Area in 2027. The list of generators within the LCR area are provided in Attachment A and does not include the CPUC-approved local capacity preferred resources or DR.

In year 2027 the estimated time of local area peak is 4:00 PM (PDT) based on the CEC hourly forecast for the 2025-2045 California Energy Demand Forecast.

At the local area peak time the estimated, ISO metered, solar output is 60%.

If required, all non-solar technology type resources are dispatched at NQC.

Table 3.3-70 LA Basin LCR Area 2027 Forecast Load and Resources

Load (MW)		Generation (MW)	Aug NQC	At Peak
Gross Load	21666	Market/Net Seller	5605	5605
AAEE, AAFS & AATE	256	Battery/Hybrid	4432	4432
Data Centers	165	Wnd	232	232
Behind the meter DG	-2552	Muni/QF	1209	1209
Net Load	**19535**	Local Capacity Preferred Resources (BTM BESS, EE, DR, PV)	145	145
Transmission Losses	800	Existing Demand Response	203	203
Pumps	0	Solar	18	18
Load + Losses + Pumps	**20335**	**Total**	**11844**	**11844**

Approved new transmission and resource projects modeled:

Laguna Bell-Mesa #1 230 kV line upgrade

Mesa Loop-In Project (500 kV and 230 kV)

West of Devers 230 kV Upgrades

Ten West Link Project (Delaney – Colorado 500 kV Line)

Lugo-Victorville 500 kV Upgrade (SCE portion)

Various battery energy storage system projects in the LA Basin

3.3.9.2 *El Nido Sub-area*

El Nido is a Sub-area of the LA Basin LCR Area.

El Nido LCR Sub-area Diagram

Please refer to Figure 3.3-84 above.

El Nido LCR Sub-area Load and Resources

Table 3.3-71 provides the forecast load and resources in El Nido LCR sub-area in 2027. The list of generators within the LCR sub-area are provided in Attachment A.

Table 3.3-71 El Nido LCR Sub-area 2027 Forecast Load and Resources

Load (MW)		Generation (MW)	Aug NQC	At Peak
Gross Load	1029	Market/Net Seller	548	548
AAEE, AAFS & AATE	17	Battery	120	120
Behind the meter DG	-113	MUNI/QF	0	0
Data Center	18	Wind	0	0
Net Load	**951**	LTPP Preferred Resources	10	10
Transmission Losses	3	Existing Demand Response	24	24
Pumps	0	Solar	0	0
Load + Losses + Pumps	**954**	**Total**	**702**	**702**

El Nido LCR Sub-area Hourly Profiles

Figure 3.3-85 illustrates the forecast 2027 annual load profile in the El Nido LCR sub-area with the transmission load serving capability only. Figure 3.3-86 provides load shape for peak load day, estimated energy storage maximum capacity and energy as well as estimated four-hour capacity amount based on its maximum charging capability under the most critical contingency.

Figure 3.3-85 El Nido LCR Sub-area 2027 Annual Load Profile with Estimated Transmission Load Serving Capability Only

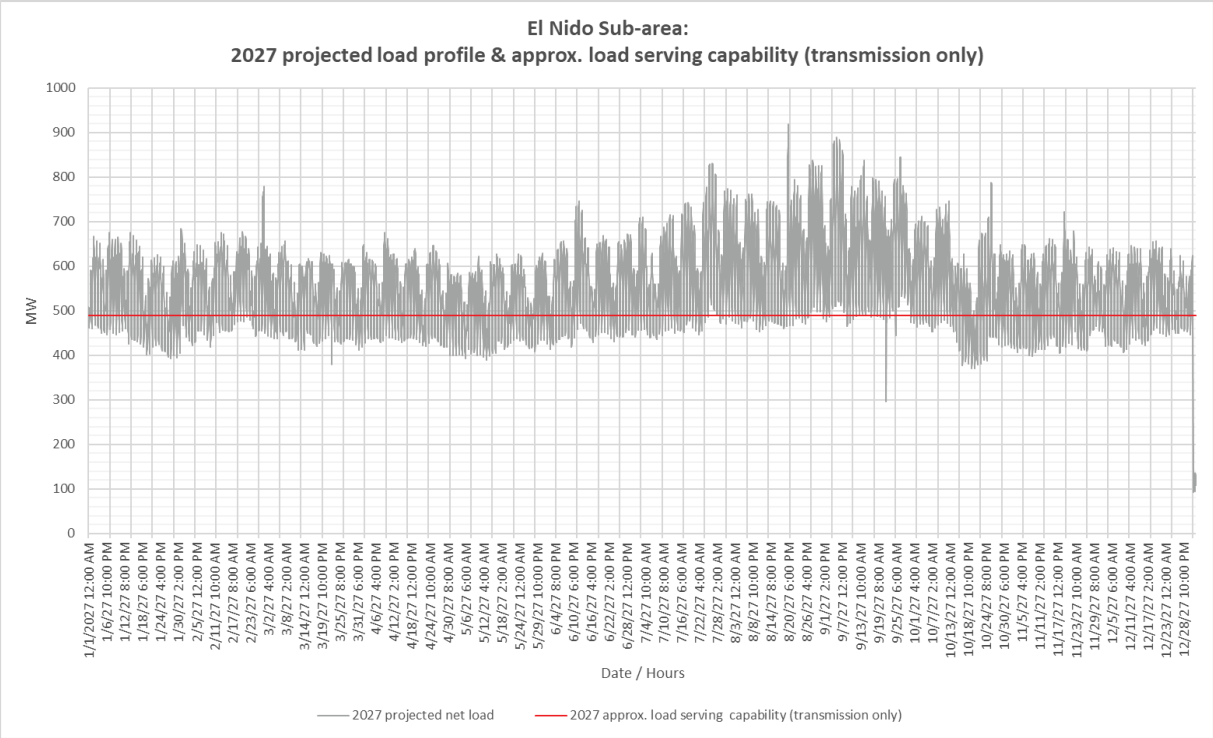

Figure 3.3-86 El Nido LCR Sub-area 2027 Load Shape and Estimated Maximum Energy Storage Capacity and Energy Based on Charging Capability Under Critical Contingency

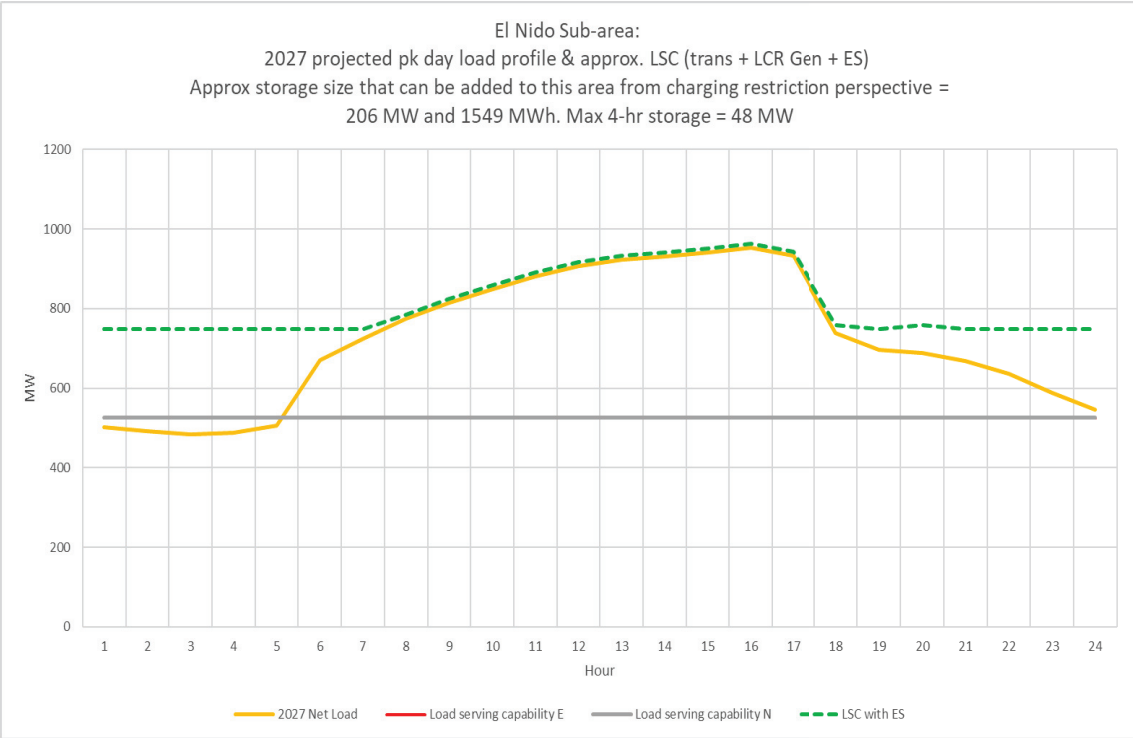

El Nido LCR Sub-area Requirement

Table 3.3-72 identifies the sub-area requirements. The LCR requirement for Category P7 contingency is 354 MW.

Table 3.3-72 El Nido LCR Sub-area Requirements

Year	Limit	Category	Limiting Facility	Contingency	LCR (MW) (Deficiency)
2027	First Limit	P7	La Fresa - La Cienega 230 kV	La Fresa – El Nido #3 & 4 230 kV lines	354

Effectiveness factors:

All units within the El Nido Sub-area have the same effectiveness factor.

For most helpful procurement information please read procedure 2210Z Effectiveness Factors under 7630 posted at: http://www.caiso.com/Documents/2210Z.pdf

3.3.9.3 *Western LA Basin Sub-area*

Western LA Basin is a sub-area of the LA Basin LCR area.

Western LA Basin LCR Sub-area Diagram

Please refer to Figure 3.3-84 above.

Western LA Basin LCR Sub-area Load and Resources

Table 3.3-73 provides the forecast load and resources in Western LA Basin LCR sub-area in 2027. The list of generators within the LCR sub-area are provided in Attachment A.

Table 3.3-73 Western LA Basin LCR Sub-area 2027 Forecast Load and Resources

Load (MW)		**Generation (MW)**	**Aug NQC**	**At Peak**
Gross Load	12390	Market/Net Seller	3345	3345
AAEE, AAFS & AATE	181	Battery/Hybrid	2556	2556
Data Centers	161	Wind	0	0
Behind the meter DG	-1493	MUNI/QF	593	593
Net Load	**11239**	LTPP Preferred Resources	148	148
Transmission Losses	468	Existing Demand Response	119	119
Pumps	0	Solar	4	4
Load + Losses + Pumps	**11707**	**Total**	**6765**	**6765**

Western LA Basin LCR Sub-area Hourly Profiles

Figure 3.3-87 illustrates the forecast 2027 annual load profile in the Western LA Basin LCR sub-area with the transmission load serving capability only. Figure 3.3-88 provides load shape for peak load day, estimated energy storage maximum capacity and energy as well as estimated four-hour capacity amount based on its maximum charging capability under the most critical contingency.

Figure 3.3-87 Western LA Basin LCR Sub-area 2027 Annual Load Profile with Estimated Transmission Load Serving Capability Only

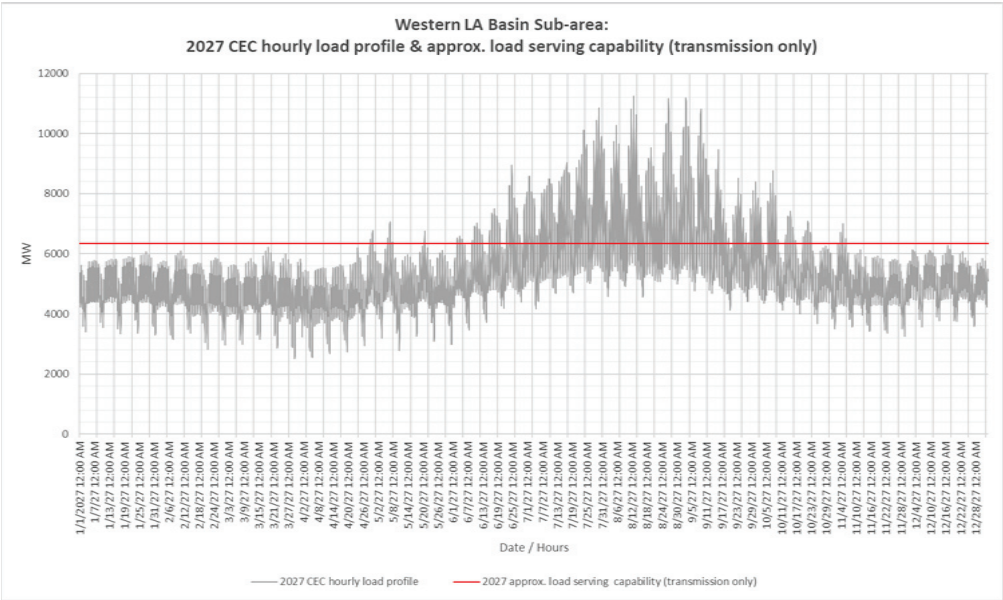

Figure 3.3-88 Western LA Basin LCR Sub-area 2027 Load Shape and Estimated Maximum Energy Storage Capacity and Energy Based on Charging Capability Under Critical Contingency

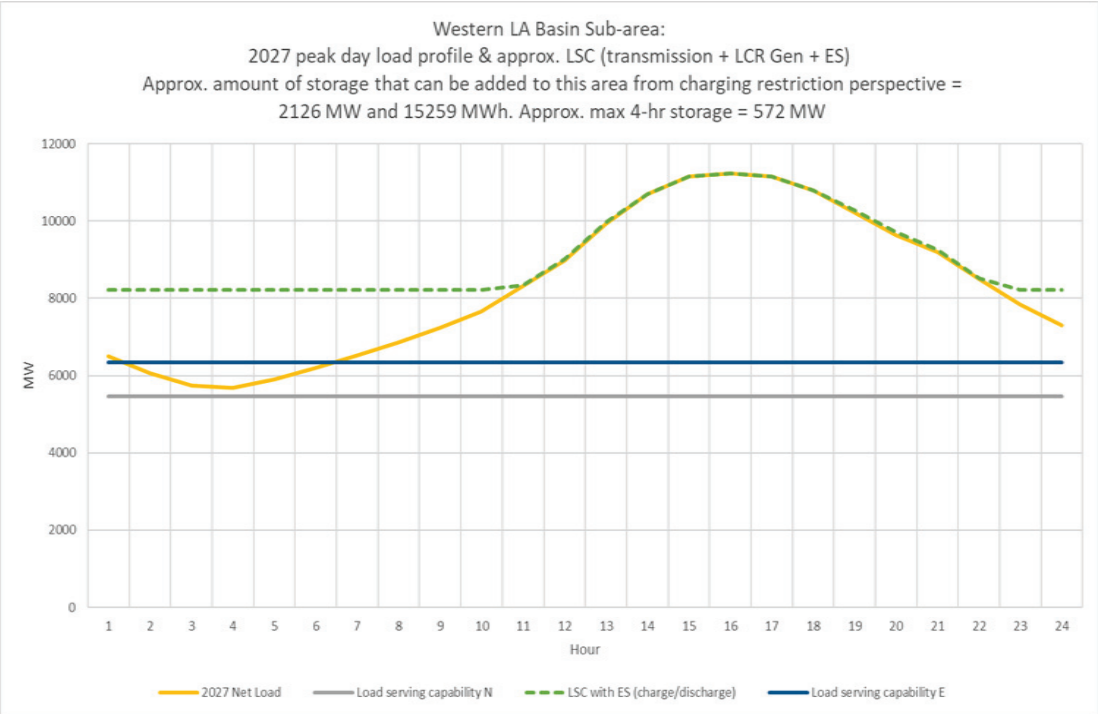

Western LA Basin LCR Sub-area Requirement

Table 3.3-74 identifies the sub-area LCR requirements. The LCR requirement for Category P6 contingency is 4891 MW. The LCR need for the Western LA Basin is higher than the 2026 LCR need due to higher CEC's demand forecast and SCE's de-rating on the Serrano AA transformer bank based on NERC alert notification related to the manufacturer's transformer test data.

Table 3.3-74 Western LA Basin LCR Sub-area Requirements

Year	Limit	Category	Limiting Facility	Contingency	LCR (MW) (Deficiency)
2027	First Limit	P6	Serrano 500/230kV Transformer Bank #1	Serrano 500/230kV Transformer Banks #2, followed by #3 (or vice versa)	4891

Effectiveness factors:

For other helpful procurement information please read procedure 2210Z Effectiveness Factors under 7630 (G-219Z) posted at: http://www.caiso.com/Documents/2210Z.pdf

There are other combinations of contingencies in the area that could overload a significant number of 230 kV lines in this sub-area have less LCR need. As such, anyone of them (combination of contingencies) could become binding for any given set of procured resources. As a result, these effectiveness factors may not be the best indicator towards informed procurement.

3.3.9.4 *West of Devers Sub-area*

West of Devers is a sub-area of the LA Basin LCR area.

There are no LCR needs for this sub-area due to implementation of prior transmission upgrades.

3.3.9.5 *Valley-Devers Sub-area*

Valley-Devers is a sub-area of the LA Basin LCR area.

There are no LCR needs for this sub-area due to implementation of prior transmission upgrades.

3.3.9.6 *Valley Sub-area*

Valley is a sub-area of the LA Basin LCR area.

There are no LCR needs for this sub-area due to implementation of prior transmission upgrades.

3.3.9.7 *Eastern LA Basin Sub-area*

Eastern LA Basin is a sub-area of the LA Basin LCR area.

Eastern LA Basin LCR Sub-area Diagram

Please refer to Figure 3.3-84 above.

Eastern LA Basin LCR Sub-area Load and Resources

Table 3.3-75 provides the forecast load and resources in Eastern LA Basin LCR sub-area. The list of generators within the LCR sub-area are provided in Attachment A.

Table 3.3-75 Eastern LA Basin LCR Sub-area 2027 Forecasted Load and Resources

Load (MW)		Generation (MW)	Aug NQC	At Peak
Gross Load	9276	Market/Net Seller	2261	2261
AAEE, AAFS & AATE	75	Battery	1876	1876
Data Center	4	MUNI/QF	616	616
Behind the meter DG	-1059	Wind	231	231
Net Load	**8296**	LTPP Preferred Resources	0	0
Transmission Losses	332	Existing Demand Response	121	121
Pumps	0	Solar	14	14
Load + Losses + Pumps	**8628**	**Total**	**5119**	**5119**

Eastern LA Basin LCR Sub-area Hourly Profiles

Figure 3.3-89 illustrates the forecast 2027 annual load profile in the Eastern LA Basin LCR sub-area with the transmission load serving capability only. Figure 3.3-90 provides load shape for peak load day,

estimated energy storage maximum capacity and energy as well as estimated four-hour capacity amount based on its maximum charging capability under the most critical contingency.

Figure 3.3-89 Eastern LA Basin LCR Sub-area 2027 Annual Load Profile with Estimated Transmission Load Serving Capability Only

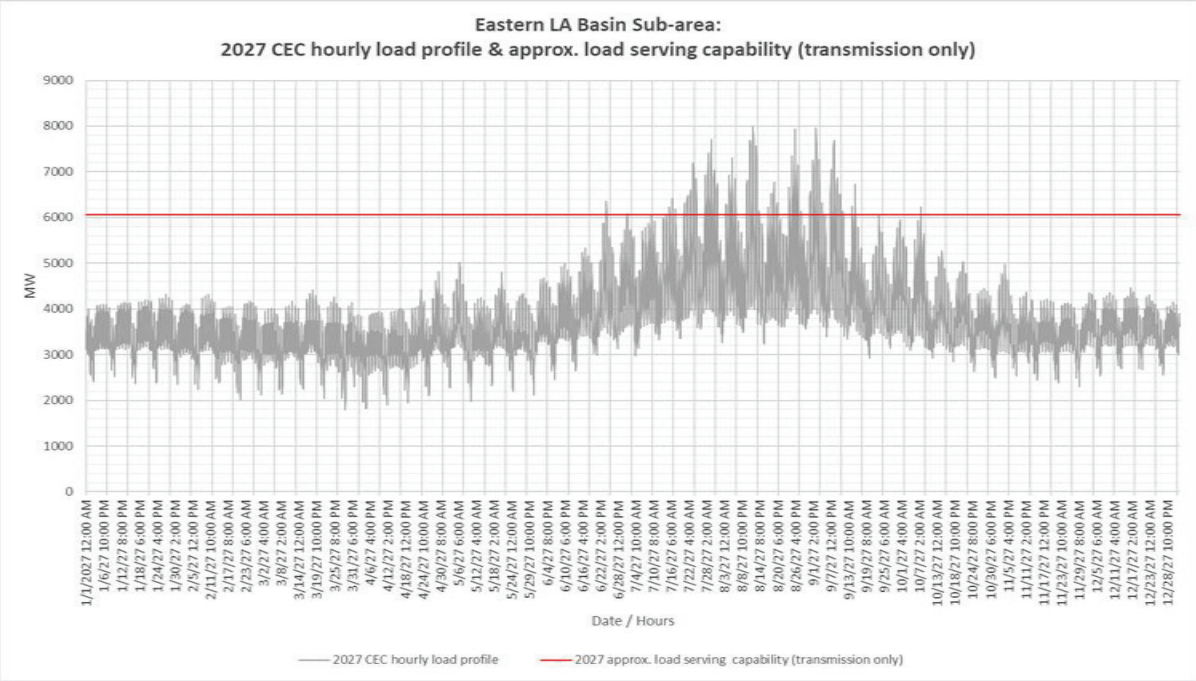

Figure 3.3-90 Eastern LA Basin LCR Sub-area 2027 Load Shape and Estimated Maximum Energy Storage Capacity and Energy Based on Charging Capability Under Critical Contingency

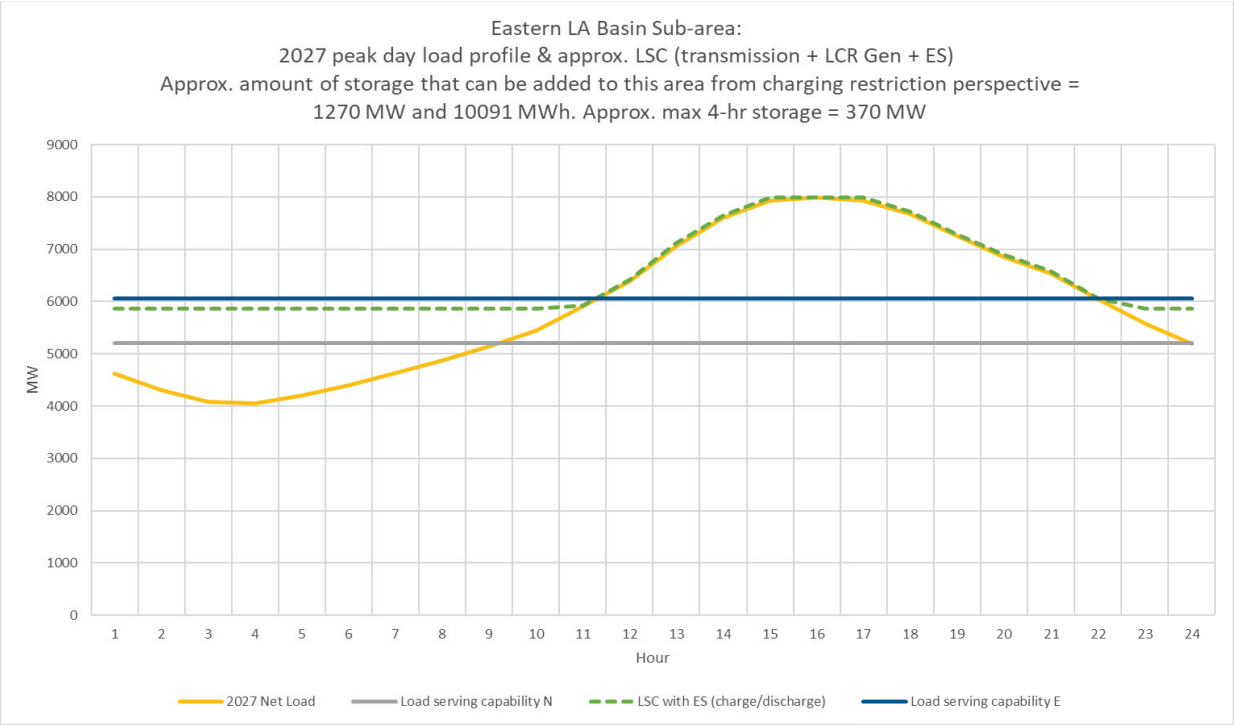

Eastern LA Basin LCR Sub-area Requirement

Table 3.3-76 identifies the sub-area LCR requirements. The LCR requirement for Category P6 contingency is 1932 MW. The LCR need for the Eastern LA Basin is lower than the 2026 LCR need due to different contingency that drives the need as well as higher LCR need and dispatch in the Western LA Basin.

Table 3.3-76 Eastern LA Basin LCR Sub-area Requirements

Year	Limit	Category	Limiting Facility	Contingency	LCR (MW) (Deficiency)
2027	First Limit	P6	Mira Loma AA Bank #1	Mira Loma Bk# 2AA, followed by 4AA Bank (or vice versa)	1932

Effectiveness factors:

All units within the Eastern LA Basin Sub-area have the same effectiveness factor.

For most helpful procurement information please read procedure 2210Z Effectiveness Factors under 7580, 7590, 7630 and 7750 posted at: http://www.caiso.com/Documents/2210Z.pdf

3.3.9.8 *LA Basin Overall*

LA Basin LCR Hourly Profiles

The following is a summary of estimated amount of storage for the sub-areas and the overall area based on maximum charging capability perspective. The LA Basin overall estimated energy storage maximum capacity and energy is the sum of the Western and Eastern LA Basin sub-area amounts.

Table 3.3-77 Estimated LA Basin Subareas and Overall Area Energy Storage Capacity and Energy Based on Maximum Charging Capability Perspective

Area/Sub-area	Estimated Energy Storage Maximum Capacity (MW)	Estimated Energy Storage Maximum Energy (MWh)	1 for 1 Replacement with 4-hour Energy Storage Capacity (MW)
El Nido sub-area	206	1549	48
Western LA Basin sub-area	2126	15259	572
Eastern LA Basin sub-area	1270	10091	370
Overall LA Basin area	3396	25350	942

LA Basin LCR area Requirement

Table 3.3-78 identifies the area requirements. The LCR requirement for the LA Basin is the sum of the Western and Eastern LA Basin local capacity requirements.

Table 3.3-78 LA Basin LCR area Requirements

Year	Limit	Category	Limiting Facility	Contingency	LCR (MW) (Deficiency)
2027	First Limit	See Western LA Basin and Eastern LA Basin	Sum of Western and Eastern LA Basin LCR needs	See Western and Eastern LA Basin LCR results	6823

Effectiveness factors:

For other helpful procurement information please read procedure 2210Z Effectiveness Factors under 7550, 7570, 7580, 7590, 7630, and 7750 posted at: http://www.caiso.com/Documents/2210Z.pdf

There are other combinations of contingencies in the area that could overload other 230 kV lines in this sub-area resulting in less LCR need. As such, anyone of them (combination of contingencies) could become binding for any given set of procured resources. As a result, these effectiveness factors may not be the best indicator towards informed procurement.

Changes compared to last year's results

Compared with 2026, the demand for the LA Basin is 609 MW higher and the LCR needs have increased by 1011 MW mainly due to load forecast increase. The increase in the overall LA Basin LCR need is driven primarily by the thermal loading concern on the Serrano AA transformer bank in the Western LA Basin under critical P6 contingency. The loading concern is further exacerbated by the derate on the Serrano AA bank due to NERC alert notification related to manufacturer's transformer testing data.

3.3.10 San Diego-Imperial Valley Area

3.3.10.1 *Area Definition:*

The transmission tie lines forming a boundary around the Greater San Diego-Imperial Valley area include:

Imperial Valley – North Gila 500 kV Line

Otay Mesa – Tijuana 230 kV Line

San Onofre – San Luis Rey #1 230 kV Line

San Onofre – San Luis Rey #2 230 kV Line

San Onofre – San Luis Rey #3 230 kV Line

San Onofre – Talega 230 kV Line

San Onofre – Capistrano 230 kV Line

Imperial Valley – El Centro 230 kV Line

Imperial Valley – La Rosita 230 kV Line

The substations that delineate the Greater San Diego-Imperial Valley area are:

Imperial Valley is in North Gila is out

Otay Mesa is in Tijuana is out

San Onofre is out San Luis Rey is in

San Onofre is out San Luis Rey is in

San Onofre is out San Luis Rey is in

San Onofre is out Talega is in

San Onofre is out Capistrano is in

Imperial Valley is in El Centro is out

Imperial Valley is in La Rosita is out

San Diego-Imperial Valley LCR Area Diagram

Figure 3.3-91 San Diego-Imperial Valley LCR Area

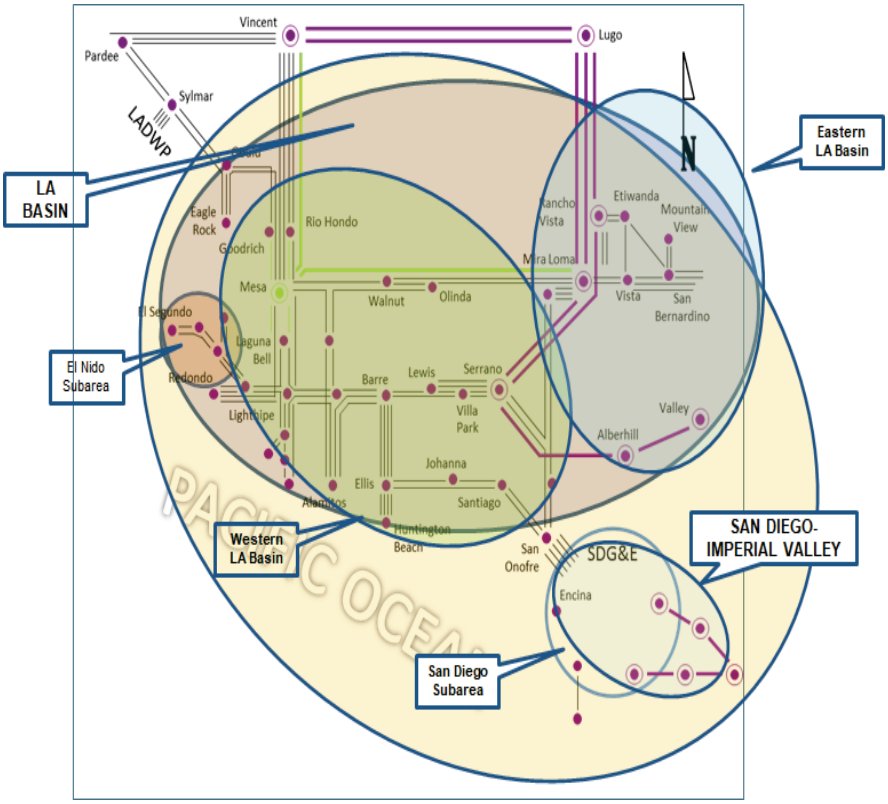

San Diego-Imperial Valley LCR Area Load and Resources

Table 3.3-79 provides the forecast load and resources in the San Diego-Imperial Valley LCR Area in 2027. The list of generators within the LCR area are provided in Attachment A.

In the year 2027 the estimated time of local area peak is 6:00 PM (PDT).

At the local area peak time the estimated, ISO metered, solar output is 26.8%.

If required, all non-solar technology type resources are dispatched at NQC.

Table 3.3-79 San Diego-Imperial Valley LCR Area 2027 Forecast Load and Resources

Load (MW)		Generation (MW)	Aug NQC	At Peak
Gross Load	4541	Market/Net Seller/Wind	3939	3939
AAEE, AAFS & AATE	88	Battery/Hybrid	1989	1989
Behind the meter DG	-126	MUNI/QF	2	2
Net Load	**4503**	LTPP Preferred Resources	0	0
Transmission Losses	87	Existing Demand Response	26	26
Pumps	0	Solar	243	243
Load + Losses + Pumps	**4590**	**Total**	**6199**	**6199**

Approved transmission projects modeled:

1. S-Line (aka Imperial Valley – El Centro 230kV) upgrade
2. Southern Orange County Reliability Upgrade Project – Alternative 3 (Rebuild Capistrano Substation, construct a new SONGS - Capistrano 230 kV line and a new 230 kV tap line to Capistrano)
3. TL649D Reconductor (San Ysidro - Otay Lake Tap)
4. Reconductor TL 605 Silvergate – Urban
5. Install 3 Ohm Series Reactor on Sycamore-Penasquitos 230 kV line
6. Sweetwater Reliability Enhancement
7. TL632 Granite Loop-In and TL6914 Reconfiguration
8. TL623C Reconductor (San Ysidro - Otay Tap)

The 500kV line series capacitors on the on the Southwest Powerlink and Sunrise Powerlink lines are bypassed in the study case.

3.3.10.2 *El Cajon Sub-area*

El Cajon sub-area will be eliminated after the TL632 Granite Loop-in and TL6914 Reconfiguration projects are in service.

3.3.10.3 *Border Sub-area*

Border is sub-area of the San Diego – Imperial Valley LCR area.

Border LCR Sub-area Diagram

Figure 3.3-92 Border LCR Sub-area

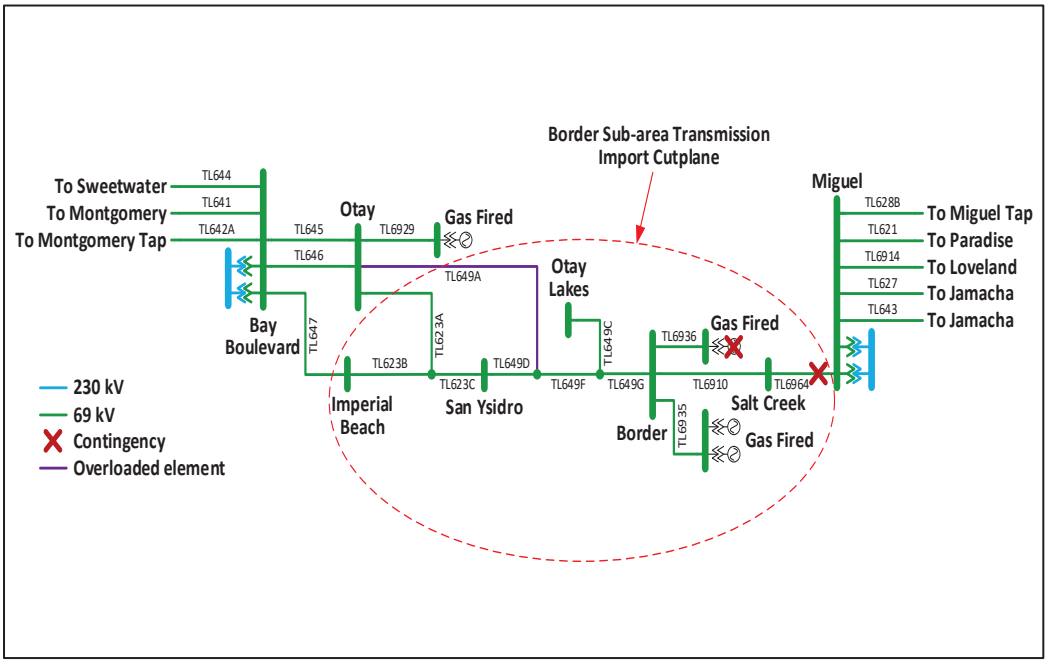

Border LCR Sub-area Load and Resources

Table 3.3-80 provides the forecast load and resources in Border LCR sub-area. The list of generators within the LCR Sub-area are provided in Attachment A.

Table 3.3-80 Border Sub-area Forecast Load and Resources

Load (MW)		Generation (MW)	Aug NQC	At Peak
Gross Load	166	Market/Net Seller	149	149
AAEE, AAFS & AATE	-3	Battery	0	0
Behind the meter DG	-4	MUNI/QF	0	0
Net Load	**159**	LTPP Preferred Resources	0	0
Transmission Losses	1	Existing 20-minute Demand Response	0	0
Pumps	0	Solar	0	0
Load + Losses + Pumps	**160**	**Total**	**149**	**149**

Border LCR Sub-area Hourly Profiles

Figure 3.3-93 illustrates the 2027 annual load forecast profile in the Border LCR sub-area and the Category P1 transmission load serving capability without gas generation. Figure 3.3-94 illustrates the 2027 daily load forecast profile for the peak day, estimated amount of energy storage that can

be added to this local area from charging restriction perspective, and estimated four-hour capacity amount under the most critical contingency.

Figure 3.3-93 Border LCR Sub-area 2027 Annual Day Forecast Profiles

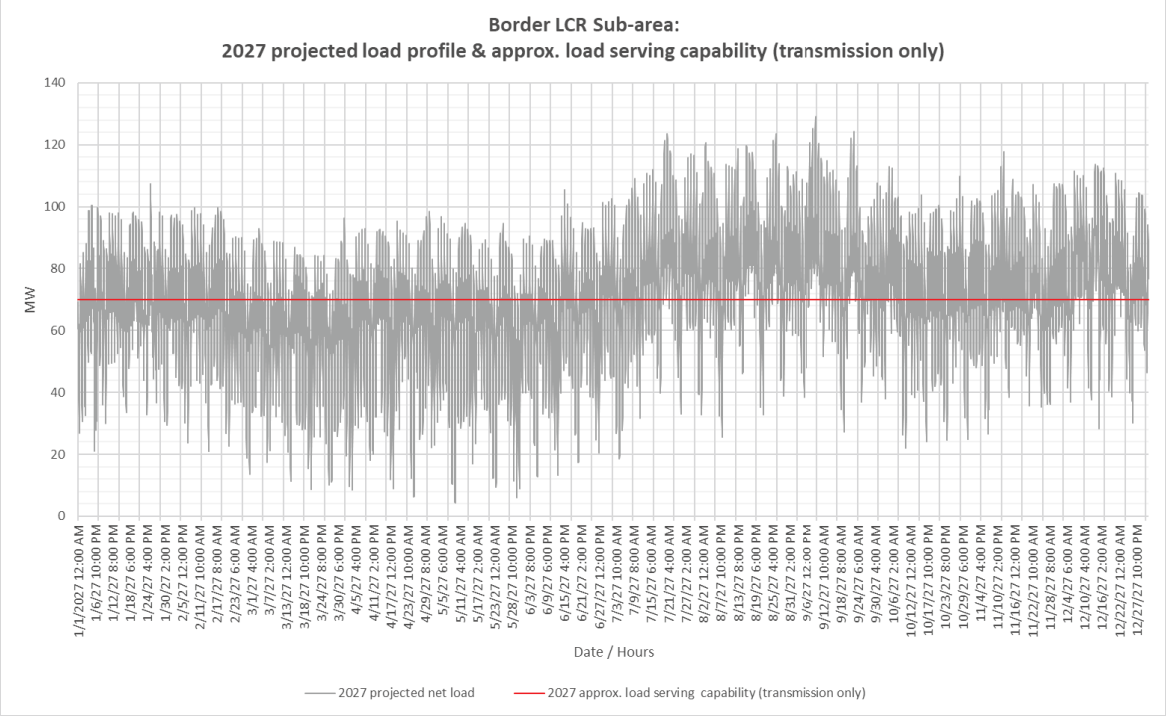

Figure 3.3-94 Border LCR Sub-area 2027 Peak Day Forecast Profiles

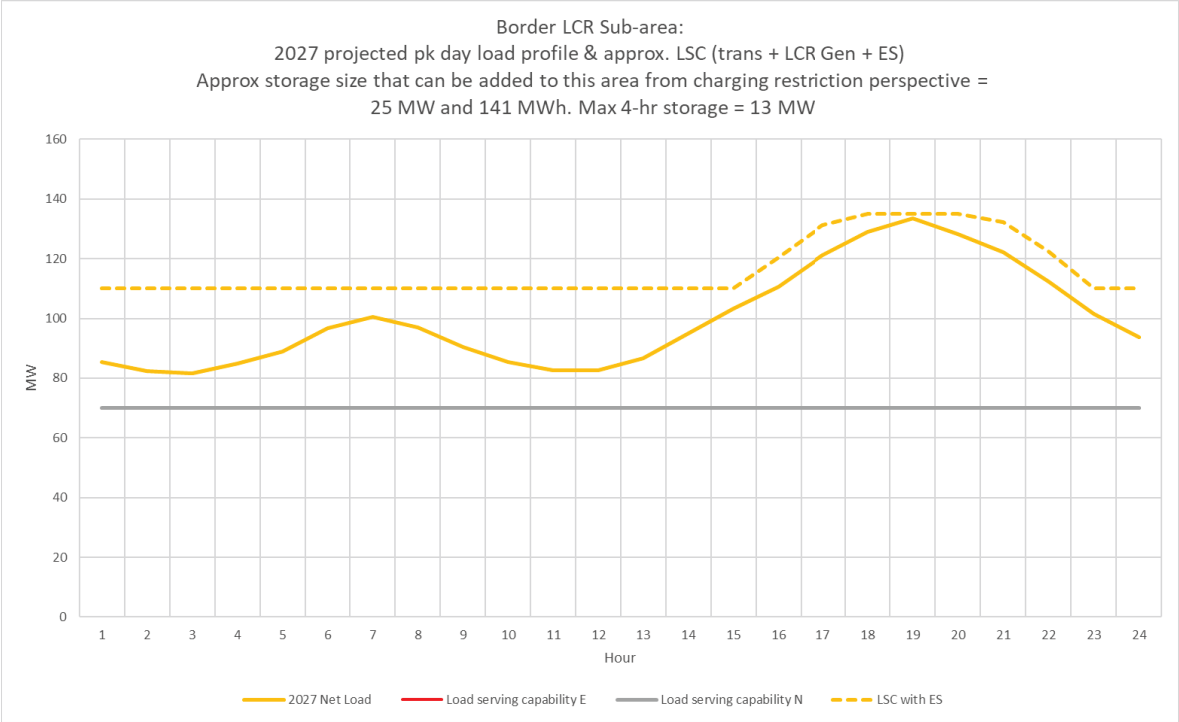

Border LCR sub-area requirement

Table 3.3-81 identifies the sub-area requirements. The LCR requirement for Category P3 contingency is 97 MW.

Table 3.3-81 Border LCR Sub-area Requirements

Year	Category	Limiting Facility	Contingency	LCR (MW) (Deficiency)
2027	P3	Otay – Otay Lakes Tap 69 kV (TL649A)	Border unit out of service followed by the outage of Miguel-Salt Creek 69 kV (TL6964)	97

Effectiveness factors:

All units within the Border sub-area have the same effectiveness factor.

3.3.10.4 *San Diego Sub-area*

San Diego is a sub-area of the San Diego-Imperial Valley LCR area.

San Diego LCR Sub-area Diagram

Please refer to Figure 3.3-91 above.

San Diego LCR Sub-area Load and Resources

Table 3.3-82 provides the forecast load and resources in San Diego LCR sub-area. The list of generators within the LCR sub-area are provided in Attachment A.

Table 3.3-82 San Diego Sub-area 2027 Forecast Load and Resources

Load (MW)		Generation (MW)	Aug NQC	At Peak
Gross Load	4541	Market/Net Seller/Wind	2696	2696
AAEE, AAFS & AATE	88	Battery/Hybrid	1399	1399
Behind the meter DG	-126	MUNI/QF	2	2
Net Load	**4503**	LTPP Preferred Resources	0	0
Transmission Losses	87	Existing Demand Response	26	26
Pumps	0	Solar	8	8
Load + Losses + Pumps	**4590**	**Total**	**4131**	**4131**

San Diego LCR Sub-area Hourly Profiles

Figure 3.3-95 illustrates the forecast 2027 annual load profile in the San Diego LCR sub-area with the transmission load serving capability only. Figure 3.3-96 provides load shape for peak load

day, estimated energy storage maximum capacity and energy as well as estimated four-hour capacity amount based on its maximum charging capability under the most critical contingency.

Figure 3.3-95 San Diego LCR Sub-area 2027 Annual Load Profile with Estimated Transmission Load Serving Capability Only

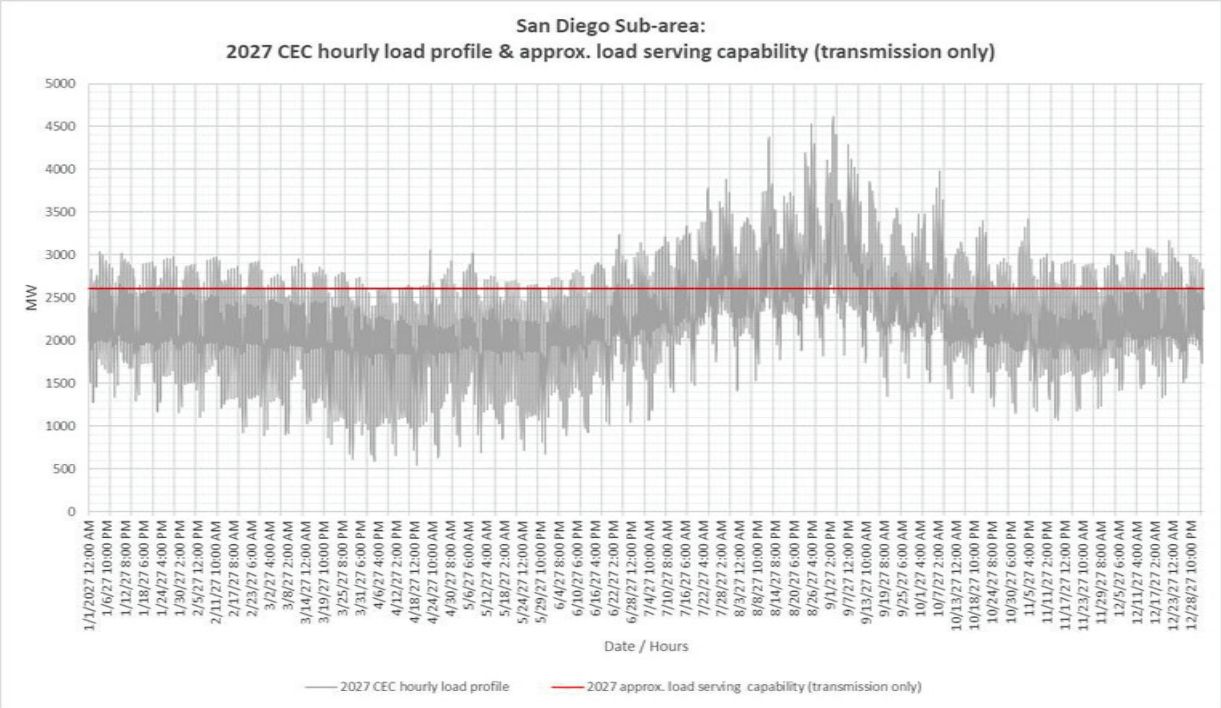

Figure 3.3-96 San Diego LCR Sub-area 2026 Load Shape and Estimated Maximum Energy Storage Capacity and Energy Based on Charging Capability Under Critical Contingency

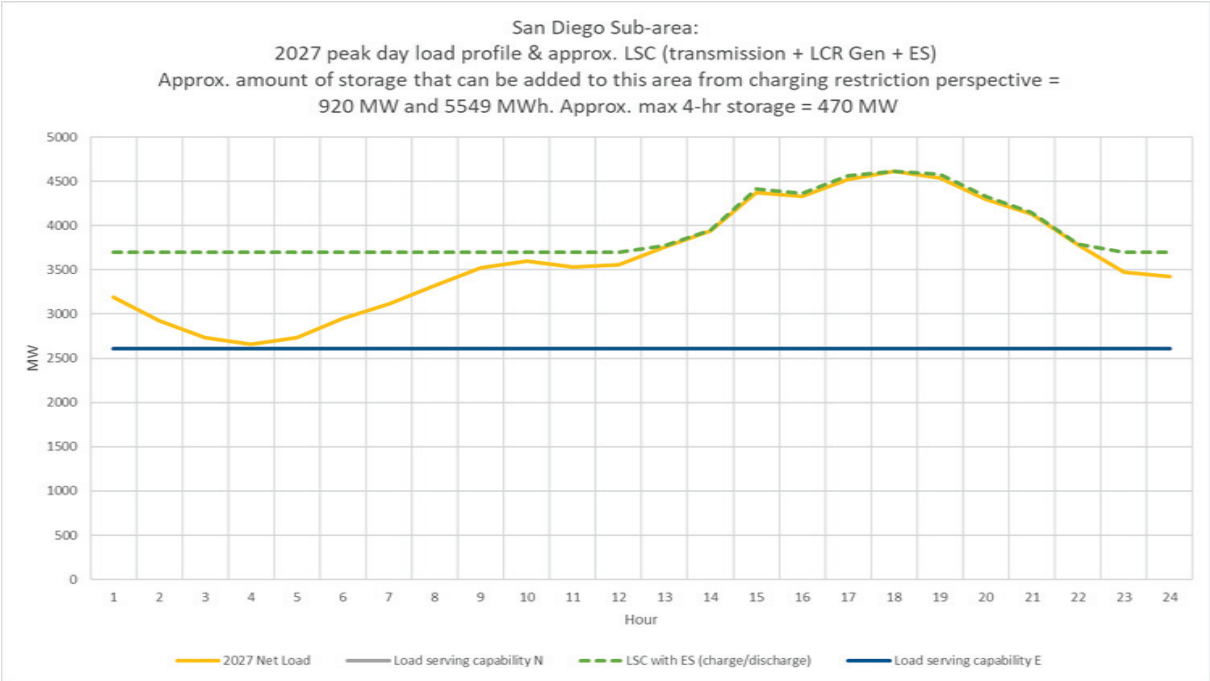

San Diego LCR Sub-area Requirement

Table 3.3-83 identifies the sub-area LCR requirements. The Category P6 contingency LCR requirement is 2006 MW. The LCR need is lower due to lower demand forecast from the CEC for the San Diego area and higher generation dispatch (for LCR need) in the Western LA Basin.

Table 3.3-83 San Diego Sub-area LCR Requirements

Year	Limit	Category	Limiting Facility	Contingency	LCR (MW) (Deficiency)
2027	First Limit	P6	Remaining Sycamore-Suncrest 230 kV line	ECO-Miguel 500 kV line, system readjustment, followed by one of the Sycamore-Suncrest 230 kV lines, or vice versa	2006

Effectiveness factors:

See Attachment B - Table titled San Diego.

For other helpful procurement information please read procedure 2210Z Effectiveness Factors under 7820 posted at: http://www.caiso.com/Documents/2210Z.pdf

3.3.10.5 *San Diego-Imperial Valley Overall*

San Diego-Imperial Valley LCR area Hourly Profiles

Since the San Diego sub-area has all the substation loads, the overall San Diego-Imperial Valley area has the same load profile as the San Diego bulk sub-area (Figure 3.3-101). The Imperial Valley area has extra generating resources. With the implementation of the S-line upgrade, additional LCR need beyond the San Diego sub-area need is eliminated. Thus, the LCR need for the overall San Diego-Imperial Valley LCR area is the same as the San Diego bulk sub-area.

The following is a summary of estimated amount of storage for the sub-areas and the overall area based on maximum charging capability perspective. Since the San Diego sub-area has all the substation loads, the overall San Diego-Imperial Valley area has the same load profile as the San Diego bulk sub-area and therefore same amount of energy storage for the San Diego sub-area.

Table 3.3-84 Estimated San Diego Sub-areas and Overall Area Energy Storage Capacity and Energy Based on Maximum Charging Capability Perspective

Area/Sub-area	Estimated Energy Storage Maximum Capacity (MW)	Estimated Energy Storage Maximum Energy (MWh)	1 for 1 Replacement with 4-hour Energy Storage Capacity (MW)
El Cajon sub-area	-	-	-
Border sub-area	25	141	13
San Diego sub-area	920	5549	470
Overall San Diego-Imperial Valley Area	920	5549	470

San Diego-Imperial Valley LCR area Requirement

Table 3.3-85 identifies the area LCR requirements. The LCR requirement for Category P6 contingency is 2006 MW.

Table 3.3-85 San Diego-Imperial Valley LCR area Requirements

Year	Limit	Category	Limiting Facility	Contingency	LCR (MW) (Deficiency)
2027	First Limit	P6	Remaining Sycamore-Suncrest 230 kV line	ECO-Miguel 500 kV line, system readjustment, followed by one of the Sycamore-Suncrest 230 kV lines, or vice versa	2006

Effectiveness factors:

See Attachment B - Table titled San Diego.

For other helpful procurement information please read procedure 2210Z Effectiveness Factors under 7820 posted at: http://www.caiso.com/Documents/2210Z.pdf

Changes compared to last year's results

Compared with the 2026 LCT Study results, the demand forecast is lower by 192 MW. The overall LCR needs for the San Diego-Imperial Valley decreases by 625 MW due to lower demand forecast, as well as having higher dispatch of local resources in the Western LA Basin to meet its LCR need. The Western LA Basin sub-area and the San Diego-Imperial Valley areas exhibit some inter-dependent relationship due to strong electrical tie between these two areas.

3.3.11 Valley Electric Area

Valley Electric Association LCR area has been eliminated on the basis of the following:

No category B issues were observed in this area

Category C and beyond –

- No common-mode N-2 issues were observed
- No issues were observed for category B outage followed by a common-mode N-2 outage
- All the N-1-1 issues that were observed can either be mitigated by the existing UVLS or by an operating procedure

3.4 Summary of Engineering Estimates for Intermediate Years by Local Area

Engineering estimates, along with detailed explanations for contributing factors in each local area are given below per methodology explained in Chapter 2 above. The estimates represent an engineering approximation. They are not actual technical studies and they may be superseded by actual technical studies.

3.4.19.1 *Humboldt Area*

The net peak load growth from 2027 to 2031 is estimated at 5 MW/year.

There is one new transmission project that directly affects the LCR change from 2027 to 2031, the Garberville area reinforcement with estimated in service date of December 2028.

There is no new resource that directly affects the LCR change from 2027 to 2031.

There is no projected change in resource contractual status that directly affects the LCR change from 2027 to 2031.

There is no resource projected to retire that directly affects the LCR change from 2027 to 2031.

The total increase for year 2028 depends only on the load forecast and the study results for year 2027 and it is estimated at about 6.75 MW/year for Category P6.

The total increase for year 2029 depends only on the load forecast and the study results for year 2031 and it is estimated at about 6.75 MW/year for Category P6.

Table 3.4-1 ISO's estimated Humboldt LCR need:

Year	Limit	Category	Limiting Facility	Contingency	LCR (MW)
2028	First Limit	P6	Humboldt-Trinity 115 kV	Cottonwood-Bridgeville 115 kV & Humboldt - Humboldt Bay 115 kV	156
2029	First Limit	P6	Humboldt-Trinity 115 kV	Cottonwood-Bridgeville 115 kV & Humboldt - Humboldt Bay 115 kV	163

3.4.19.2 *North Coast/ North Bay Area*

The net peak load growth from 2027 to 2031 is estimated at about 62.25 MW/year.

There are 3 new transmission project that directly affects the LCR change from 2027 to 2031.

- Clear Lake 60 kV System Reinforcement (sub-area need only-2031)
- Santa Rosa 115 kV lines Reconductoring project (sub-area need only-2030)
- New Collinsville 500 kV Substation (2028)

The New Collinsville 500 kV Substation project with LCR reduction will be in-service in 2028 and will only influence the LCR results starting 2028.

There is no new resource that directly affects the LCR change from 2027 to 2031.

There is no projected change in resource contractual status that directly affects the LCR change from 2027 to 2031.

There is no resource projected to retire that directly affects the LCR change from 2027 to 2031.

The total need for year 2028 and 2029 depends on load growth and the results for both years and it is estimated to be 108 MW/year.

Table 3.4-2 ISO's estimated North Coast/ North Bay LCR need:

Year	Limit	Category	Limiting Facility	Contingency	LCR (MW)
2028	First Limit	P6	Eagle Rock-Cortina 115 kV line	Vaca Dixon-Tulucay 230 kV and Cortina-Mendocino 115 kV lines	700
2029	First Limit	P6	Eagle Rock-Cortina 115 kV line	Vaca Dixon-Tulucay 230 kV and Cortina-Mendocino 115 kV lines	808

3.4.19.3 *Sierra Area*

The net peak load growth from 2027 to 2031 is estimated at 92.5 MW/year.

There are 3 new transmission projects that directly affects the LCR change from 2027 to 2031.

- Reconductor Rio Oso–SPI Jct–Lincoln 115 kV line (Dec 2028)
- Gold Hill 230/115 kV Transformer Addition (June 2029)
- East Marysville 155/60 kV (Jan 2030)

These projects inpact sub-area need only and will not influence years 2028 and 2029,

There is no new resource that directly affects the LCR change from 2027 to 2031.

There is no projected change in resource contractual status that directly affects the LCR change from 2027 to 2031.

There is no resource projected to retire that directly affects the LCR change from 2027 to 2031.

The total requirement for both year 2028 and 2029 depend on the result for year 2027 only plus an estimated increase of 20.75 MW/year for Category P6.

Table 3.4-3 ISO's estimated Sierra LCR need:

Year	Limit	Category	Limiting Facility	Contingency	LCR (MW)
2028	First limit	P6	Table Mountain – Pease 60 kV	Table Mountain – Palermo 230 kV Table Mountain – Rio Oso 230 kV	1913
2029	First limit	P6	Table Mountain – Pease 60 kV	Table Mountain – Palermo 230 kV Table Mountain – Rio Oso 230 kV	1934 (10)

3.4.19.4 *Stockton Area*

The net peak load growth from 2027 to 2031 is estimated at 70 MW/year.

There are two new transmission project that directly affects the LCR change from 2027 to 2031.

- Manteca-Ripon-Riverbank-Melones Area 115 kV Line Reconductoring projectwith in-service date in Oct 2029 that does not affects the Tesla-Bellota sub-area in year 2028 and 2029
- Lockeford – Lodi Area 230 kV Development project with in-service date in December 2029 that affects Lockeford sub-area and therefore it will not impact the LCR results in 2028 and 2029.

There is one new resource that directly affects the LCR change from 2027 to 2031 and it has an in-service date of Sept 2028 and will only affect year 2029.

There is no projected change in resource contractual status that directly affects the LCR change from 2027 to 2031.

There is no resource projected to retire that directly affects the LCR change from 2027 to 2031.

The total need for years 2028 and 2029 depend on the study results for year 2027 the estimated load growth and on the available resources in the Lockeford and Tesla-Bellota sub-areas.

Table 3.4-4 ISO's estimated Stockton LCR need:

Year	Limit	Category	Limiting Facility	Contingency	LCR (MW)
2028	First Limit	N/A	Stockton Overall		779 (303)
2029	First Limit	N/A	Stockton Overall		847 (305)

3.4.19.5 *Bay Area*

The net peak load growth from 2027 to 2031 is estimated at 923 MW/year.

There are a few new transmission projects that directly affect the LCR change from 2027 to 2031.

The TPP project impact to the Bay Area overall requirement for years 2028 and 2029 are about the same because the most important LCR reduction projects in-service dates are before summer 2028.

There are no new resources that directly affect the LCR change from 2027 to 2031.

There is no projected change in resource contractual status that directly affects the LCR change from 2027 to 2031.

There are no resources projected to retire that directly affects the LCR change from 2027 to 2031.

The total LCR need in 2028 and 2029 depend on the studies results for year 2027 and 2031, the load growth between years and the available resources in the area. Because Bay Area is already deficient in year 2027 it will stay deficient in 2028 and 2029.

Table 3.4-5 ISO's estimated Bay Area LCR need:

Year	Limit	Category	Limiting Facility	Contingency	LCR (MW)
2028	First limit	P6	Metcalf #13 500/230 kV TB	Metcalf #11 & #12 500/230 kV TBs	8315 (2219)
2029	First limit	P6	Metcalf #13 500/230 kV TB	Metcalf #11 & #12 500/230 kV TBs	8315 (2462)

3.4.19.6 *Fresno Area*

The net peak load growth from 2027 to 2031 is estimated at 124.75 MW/year.

There are a few new transmission projects that directly affect the LCR change from 2027 to 2031.

The TPP project impact is minimal to both years because none of the projects directly impact the Fresno overall LCR need.

There are no new resources that directly affect the LCR change from 2027 to 2031. The NQC for the two new resources is projected to increase in year 2028.

There is no projected change in resource contractual status that directly affects the LCR change from 2027 to 2031.

There is no resource projected to retire that directly affects the LCR change from 2027 to 2031.

The total increase for each intermediate year depends on load growth and the study results between years 2027 and 2031 and it is estimated at about 242.5 MW/year for Category P6.

Table 3.4-6 ISO's estimated Fresno LCR need:

Year	Limit	Category	Limiting Facility	Contingency	LCR (MW)
2028	First limit	P6	Kingsburg-Contadina 115 kV Line	Mc Call-Helm 230 kV Line and Mc Call-Mustang 230 kV line	2333
2029	First limit	P6	Kingsburg-Contadina 115 kV Line	Mc Call-Helm 230 kV Line and Mc Call-Mustang 230 kV line	2575

3.4.19.7 *Kern Area*

The net peak load growth from 2027 to 2031 is estimated at 37.75 MW/year.

There is no new transmission project that directly affects the LCR change from 2027 to 2031.

There are no new resources that directly affect the LCR change from 2027 to 2031.

There is no projected change in resource contractual status that directly affects the LCR change from 2027 to 2031.

There is no resource projected to retire that directly affects the LCR change from 2027 to 2031.

The total increase in LCR requirement for year 2028 and 2029 are only dependent on the results for years 2027 and 2031 results and it is projected to be 26.5 MW/year.

The Wespark sub-area will start becoming deficient in 2029 by 10 MW.Table 3.4-7 ISO's estimated Kern LCR need:

Year	Limit	Category	Limiting Facility	Contingency	LCR (MW)
2028	N/A	P6	Aggregate of Sub-areas.		342
2029	N/A	P6	Aggregate of Sub-areas.		368 (10)

3.4.19.8 *Big Creek/Ventura Area*

The net peak load growth from 2027 to 2031 is estimated at 90.75 MW/year.

There is one new transmission project that directly affects the LCR change from 2027 to 2031.

The Sylmar-Pardee 230 kV Rating Increase Project does not influence years 2028 and 2029 due to change in limiting contingency.

There are no new resources that directly affect the LCR change from 2027 to 2031.

There is no projected change in resource contractual status that directly affects the LCR change from 2027 to 2031.

There are no resources projected to retire that directly affects the LCR change from 2027 to 2031.

The total increase in LCR requirement for year 2028 and 2029 are dependent on the results for years 2027 and 2031 and it is projected to be 16.5 MW/year.

Table 3.4-8 ISO's estimated Big Creek/Ventura LCR need:

Year	Limit	Category	Limiting Facility	Contingency	LCR (MW)
2028	First Limit	P1+P7	Voltage collapse	Lugo - Victorville 500 kV line followed the Sylmar - Pardee #1 and #2 230 kV lines	721
2029	First Limit	P1+P7	Voltage collapse	Lugo - Victorville 500 kV line followed by the Sylmar - Pardee #1 andr #2 230 kV lines	737

3.4.19.9 *LA Basin Area*

The net peak load growth from 2027 to 2031 is estimated at 488 MW/year.

There are a few new transmission projects that directly affect the LCR change from 2027 to 2031. The most important will be in-service after 2029 and therefore will not affect either years.

There are no new resources that directly affect the LCR change from 2027 to 2031.

There is no projected change in resource contractual status that directly affects the LCR change from 2027 to 2031.

There are no resources projected to retire that directly affect the LCR change from 2027 to 2031.

The total increase for each intermediate year depends on load growth and the study results for year 2027 only and it is estimated as an increase of about 449 MW/year.

Table 3.4-9 ISO's estimated LA Basin LCR need:

Year	Limit	Category	Limiting Facility	Contingency	LCR (MW)
2028	First Limit	N/A	Sum of Western and Eastern	See Western and Eastern	7272
2029	First Limit	N/A	Sum of Western and Eastern	See Western and Eastern	7721

3.4.19.10 *San Diego-Imperial Valley Area*

The net peak load growth from 2027 to 2031 is estimated at 110.75 MW/year.

There are a few transmission projects that directly affect the LCR change from 2027 to 2031. The projects however do not meaningfully impact the overall LCR results.

There are a few new resources that do not directly affect the LCR change from 2027 to 2031. One will be in-service before 2028 and affect the NQC for both years, the other after 2029 as such will not affect the NQC in any of the two years.

There is no projected change in resource contractual status that directly affects the LCR change from 2027 to 2031.

There is no resource projected to retire that directly affects the LCR change from 2027 to 2031.

The total increase for each intermediate year depends on load growth and the study results between years 2027 and 2031 and it is estimated at about 8 MW/year for Category P6.

Table 3.4-10 ISO's estimated San Diego-Imperial Valley LCR need:

Year	Limit	Category	Limiting Facility	Contingency	LCR (MW)
2028	First Limit	P6	Remaining Sycamore – Suncrest 230 kV	Eco – Miguel 500 kV, followed by one of the Sycamore – Suncrest 230 kV lines	2014
2029	First Limit	P6	Remaining Sycamore – Suncrest 230 kV	Eco – Miguel 500 kV, followed by one of the Sycamore – Suncrest 230 kV lines	2022

4. Energy Storage Assessment as Part of LCR Study

4.1 Introduction

Energy storage is emerging as an essential part of the of the resource mix due to its characteristic of being able to store and release energy as required. Due to this flexibility, the energy storage compliments the development of renewable generation like wind and solar which are intermittent in nature. However, similar to wind and solar, energy storage resources are also use limited. As such, when energy storage is considered as a solution to the transmission system reliability needs, the sufficiency of the alternative needs to be validated for every hour of the day. Unlike other use limited resources, energy storage is also a load when it is operating in a charging mode. Therefore, the 24-hour validation also need to make sure that the transmission system has sufficient capability to charge the energy storage resource.

As part of the annual LCR study, the ISO has been performing assessment to estimate a maximum amount of energy storage that can be added to a local capacity area from the charging restriction perspective. The purpose of this section is to outline the approach of the evaluation of energy storage as part of the LCR study.

4.2 Energy Storage Assessment Approach

The basic concept of the energy storage assessment is to perform a 24-hour validation. The 24-hour validation is performed to make sure that there will be sufficient window and system capacity to be able to charge the storage for the next day peak under the worst contingency condition. The validation includes hour-by-hour comparison of the net load[8] versus the total (transmission + generation) load serving capability.

Peak day 24-hour load profile is used, either directly from the CEC hourly load forecast for the year of study or, if the study area is smaller (local) and the corresponding CEC hourly load forecast is not available, the future year load profile is developed by escalating from the historical load profile for the study area. In the latter approach, the historical load profile is escalated in a manner that accounts for the change in load shape from historical due to forecasted incremental behind-the-meter PV generation (BTM-PV) in the area.

System load serving capability includes transmission system load serving capability and local generation load serving capability. The transmission system load serving capability is calculated under the worst contingency condition without any local generation. The local generation load serving capability is calculated under the worst contingency condition with amount of generation needed according to the local capacity requirement considering effectiveness of the aggregate of local generation to the worst constraint.

[8] Net load here is defined as gross load minus contribution from behind-the-meter generation and load modifier, like additional achievable energy efficiency (AAEE).

Table below includes key assumptions used in the energy storage assessment.

Table 4.2-1 Key assumptions used in the energy storage assessment

Assumption	Rationale
Storage added displaces existing generation (all types) MW to MW in aggregation.	To maintain local RA capacity. Any incremental storage is assumed to be an local RA resource
Maximum storage addition cannot exceed LCR amount.	To maintain local RA capacity. Any incremental storage is assumed to be an local RA resource
Includes storage charging/discharging efficiency of 85%.	Based on general battery efficiency
Storage is charged in all hours where the storage is not discharged. Maximum charging is capped at the amount of storage size (Pmin).	Under worst contingency condition, for battery to have sufficient discharge energy, it is assumed that battery is charged in all hours it is not discharged.
An hourly energy margin of 5% or 10 MW, the larger of the two, is applied to both charging and discharging need.	To add margin when battery is discharging so it does not have to follow load curve exactly. For charging same margin is added to discount available system capability each hour.

4.2.1 Load Data

The first step in preforming the 24-hour validation is to develop a peak-day load profile. For the local capacity areas for which the area definition match with the definition of areas in CEC load forecast, the 24-hour peak day profile can be extracted directly from the CEC hourly load forecast data. For other local capacity areas, future year load profile need to be developed by escalating from the historical load profile for the study area. In the latter approach, the historical load profile is escalated in a manner that accounts for the change in load shape from historical due to forecasted incremental behind-the-meter PV generation (BTM-PV) in the area.

4.2.2 Load Serving Capabilities

Second step in performing the 24-hour validation is to calculate load serving capabilities. Transmission-only load serving capabilities are calculated in power flow under the worst LCR contingency by turning off all local generation following by scaling down load in the local area until the constraint is addressed. For some local areas, it may not be feasible to achieve this with AC solution in the power flow and may need to rely on the spreadsheet based calculation using DC effectiveness factors. The transmission-only load serving capability is used uniformly for each hour within the 24-hour validation. Local generation load serving capability is calculated

under the same worst LCR contingency condition with amount of generation needed according to the local capacity requirement considering effectiveness of the aggregate of local generation to the constraint. The generation load serving capability needs to be captured separately for different technologies due to having different output profiles within the 24-hour period. The conventional thermal resources are assumed to have uniform capability throughout the 24-hour period. Whereas, the renewables, like solar and wind are dispatched using appropriate output profiles. The use-limited resources, like storage and demand response are to be dispatched within the period of peak load hours staying within the available total energy. The transmission-only and the local generation load serving capabilities are then added together to get the total load serving capabilities for each hour.

With the transmission-only load serving capability and generation load serving capabilities using LCR resources calculated, each hour should have sufficient load serving capability to serve the net load and provides the setup for energy storage addition estimation.

4.2.3 Estimating Energy Storage Addition

Once the hourly data for the net load and load serving capabilities are stablished, additional amount storage can be estimated by adding storage and displacing existing local area LCR resource by the same amount. Because of the displacement of the existing local resources, generation load serving capability will be reduced, which will result in the total load serving capability being less than the net load for certain hours. The storage added then can be dispatched within those hours. An hourly energy margin of 5% or 10 MW, the larger of the two, is added to the storage MW needed for each of the deficient hours. This is done to create a step dispatch in the storage operation instead of following the load curve perfectly. Once the storage is dispatched for all the deficient hours with appropriate amount, the storage MW dispatched are added together to get the total storage energy (MWh) need associated with the storage MW chosen. The storage is charged within the hours that it is not discharged by using the surplus load serving capability. An hourly energy margin of 5% or 10 MW, the larger of the two, is reduced from the surplus load serving capabilities to account for potential inaccuracies load forecasting and in calculating various load serving capabilities. The process is repeated by increasing or decreasing the chosen storage MW until the total discharging energy becomes equal to the total available charging energy, which establishes the maximum amount of energy storage that can be added to the local area from the charging restriction perspective.

The energy storage addition estimation is performed only for the LCR area /subareas with a defined load pocket. The energy storage addition estimation is not performed for flow-through areas as these don’t have defined load pocket and as such, don’t have a particular load profile.

4.2.4 1-to-1 Replacement with 4-hour Storage

The maximum 4-hour energy storage amount is also estimated as part of this assessment. The maximum 4-hour MW is not a physical limit. Instead, it is a limit up to which a 4-hour energy storage can replace the existing local resource 1-to-1.

Attachment A - List of physical resources accounted for in the 2027 and 2031 Local Capacity Technical studies

https://stakeholdercenter.caiso.com/InitiativeDocuments/AttachmentA-List-of-Physical-Resources-Accounted-for-in-the-2027-and-2031-Local-Capacity-Technical-Studies.xlsx

Attachment B – Effectiveness factors for procurement guidance

Table - Eagle Rock.

Effectiveness factors to the Eagle Rock-Cortina 115 kV line:

Gen Bus	Gen Name	Gen ID	Eff Factor (%)
31406	GEYSR5-6	1	36
31406	GEYSR5-6	2	36
31408	GEYSER78	1	36
31408	GEYSER78	2	36
31412	GEYSER11	1	37
31435	GEO.ENGY	1	35
31435	GEO.ENGY	2	35
31433	POTTRVLY	1	34
31433	POTTRVLY	3	34
31433	POTTRVLY	4	34
38020	CITY UKH	1	32
38020	CITY UKH	2	32

Table – Rio Oso

Effectiveness factors to the Rio Oso-Atlantic 230 kV line:

Gen Bus	Gen Name	Gen ID	Eff Factor. (%)
32498	SPILINCF	1	49
32500	ULTR RCK	1	49
32456	MIDLFORK	1	33
32456	MIDLFORK	2	33
32458	RALSTON	1	33
32513	ELDRADO1	1	32
32514	ELDRADO2	1	32
32510	CHILIBAR	1	32
32486	HELLHOLE	1	31

32508	FRNCH MD	1	30
32460	NEWCSTLE	1	26
32478	HALSEY F	1	24
32512	WISE	1	24
38114	Stig CC	1	14
38123	Q267CT	1	14
38124	Q267ST	1	14
32462	CHI.PARK	1	8
32464	DTCHFLT1	1	4

Table – Sierra Overall

Effectiveness factors to the Table Mountain – Pease 60 kV line:

Gen Bus	Gen Name	Gen ID	Eff Factor. (%)
32492	GRNLEAF2	1	17
32494	YUBA CTY	1	17
32496	YCEC	1	17
31794	WOODLEAF	1	6
31814	FORBSTWN	1	6
31832	SLY.CR.	1	6
31834	KELLYRDG	1	6
31888	OROVLENRG	1	6
32451	FREC	1	5
32450	COLGATE1	1	5
32466	NARROWS1	1	5
32468	NARROWS2	1	5
32470	CMP.FARW	1	5
32452	COLGATE2	1	5
32156	WOODLAND	1	4
32498	SPILINCF	1	4
32502	DTCHFLT2	1	4
32454	DRUM 5	1	3
32474	DEER CRK	1	3
32476	ROLLINSF	1	3

Gen Bus	Gen Name	Gen ID	Eff Factor. (%)
32484	OXBOW F	1	3
32504	DRUM 1-2	1	3
32504	DRUM 1-2	2	3
32506	DRUM 3-4	1	3
32506	DRUM 3-4	2	3
32464	DTCHFLT1	1	3
32480	BOWMAN	1	3
32488	HAYPRES+	1	3
32488	HAYPRES+	2	3
32472	SPAULDG	1	3
32472	SPAULDG	2	3
32472	SPAULDG	3	3
32462	CHI.PARK	1	3
32500	ULTR RCK	1	3
31784	BELDEN	1	3
31786	ROCK CK1	1	3
31788	ROCK CK2	1	3
31790	POE 1	1	3
31792	POE 2	1	3
31812	CRESTA	1	3
31812	CRESTA	2	3
31820	BCKS CRK	1	3
31820	BCKS CRK	2	3
32478	HALSEY F	1	2
32512	WISE	1	2
32460	NEWCSTLE	1	2
32510	CHILIBAR	1	2
32513	ELDRADO1	1	2
32514	ELDRADO2	1	2
32456	MIDLFORK	1	2
32456	MIDLFORK	2	2
32458	RALSTON	1	2
32486	HELLHOLE	1	2

Gen Bus	Gen Name	Gen ID	Eff Factor. (%)
32508	FRNCH MD	1	2
38114	STIG CC	1	1
38123	LODI CT1	1	1
38124	LODI ST1	1	1

Table – South Bay-Moss Landing

Effectiveness factors to the Moss Landing-Las Aguillas 230 kV line:

Gen Bus	Gen Name	Gen ID	Eff Factor. (%)
36209	SLD ENRG	1	20
36221	DUKMOSS1	1	20
36222	DUKMOSS2	1	20
36223	DUKMOSS3	1	20
36224	DUKMOSS4	1	20
36225	DUKMOSS5	1	20
36226	DUKMOSS6	1	20
36405	MOSSLND6	1	17
36406	MOSSLND7	1	17
35881	MEC CTG1	1	13
35882	MEC CTG2	1	13
35883	MEC STG1	1	13
35850	GLRY COG	1	12
35850	GLRY COG	2	12
35851	GROYPKR1	1	12
35852	GROYPKR2	1	12
35853	GROYPKR3	1	12
35623	SWIFT	BT	10
35863	CATALYST	1	10
36863	DVRaGT1	1	8
36864	DVRbGt2	1	8
36865	DVRaST3	1	8
36859	Laf300	2	8
36859	Laf300	1	8
36858	Gia100	1	7

36895	Gia200	1	7
35854	LECEFGT1	1	7
35855	LECEFGT2	1	7
35856	LECEFGT3	1	7
35857	LECEFGT4	1	7
35858	LECEFST1	1	7
35860	OLS-AGNE	1	7

Table – Ames/Pittsburg/Oakland

Effectiveness factors to the Ames-Ravenswood #1 115 kV line:

Gen Bus	Gen Name	Gen ID	Eff Factor. (%)
35304	RUSELCT1	1	10
35305	RUSELCT2	2	10
35306	RUSELST1	3	10
33469	OX_MTN	1	10
33469	OX_MTN	2	10
33469	OX_MTN	3	10
33469	OX_MTN	4	10
33469	OX_MTN	5	10
33469	OX_MTN	6	10
33469	OX_MTN	7	10
33107	DEC STG1	1	3
33108	DEC CTG1	1	3
33109	DEC CTG2	1	3
33110	DEC CTG3	1	3
33102	COLUMBIA	1	3
33111	LMECCT2	1	3
33112	LMECCT1	1	3
33113	LMECST1	1	3
33151	FOSTER W	1	2
33151	FOSTER W	2	2
33151	FOSTER W	3	2
33136	CCCSD	1	2
33141	SHELL 1	1	2

33142	SHELL 2	1	2
33143	SHELL 3	1	2
32900	CRCKTCOG	1	2
32910	UNOCAL	1	2
32910	UNOCAL	2	2
32910	UNOCAL	3	2
32920	UNION CH	1	2
32921	ChevGen1	1	2
32922	ChevGen2	1	2
32923	ChevGen3	3	2
32741	HILLSIDE_12	1	2
32901	OAKLND 1	1	1
32902	OAKLND 2	2	1
32903	OAKLND 3	3	1
38118	ALMDACT1	1	1
38119	ALMDACT2	1	1

Effectiveness factors to the Moraga-Claremont #2 115 kV line:

Gen Bus	Gen Name	Gen ID	Eff Factor (%)
32921	ChevGen1	1	17
32922	ChevGen2	1	17
32923	ChevGen3	3	17
32901	OAKLND 1	1	16
32902	OAKLND 2	1	16
32903	OAKLND 3	1	16
38118	ALMDACT1	1	16
38119	ALMDACT2	1	16
32920	UNION CH	1	16
32910	UNOCAL	1	15
32910	UNOCAL	2	15
32910	UNOCAL	3	15
33141	SHELL 1	1	10
33142	SHELL 2	1	10
33143	SHELL 3	1	10
33136	CCCSD	1	9
32900	CRCKTCOG	1	8
33151	FOSTER W	1	6

33151	FOSTER W	2	6
33151	FOSTER W	3	6
33102	COLUMBIA	1	3
33111	LMECCT2	1	3
33112	LMECCT1	1	3
33113	LMECST1	1	3
33107	DEC STG1	1	3
33108	DEC CTG1	1	3
33109	DEC CTG2	1	3
33110	DEC CTG3	1	3

Table – Greater Bay Area

Effectiveness factors to the Metcalf 500/230 kV Transformer #13:

Gen Bus	Gen Name	Gen ID	Eff Factor (%)
35881	MEC CTG1	1	40
35882	MEC CTG2	1	40
35883	MEC STG1	1	40
35859	HGST-LV	RN	36
35850	GLRY COG	1	30
35850	GLRY COG	2	30
35851	GROYPKR1	1	30
35852	GROYPKR2	1	30
35853	GROYPKR3	1	30
35623	SWIFT	BT	29
35863	CATALYST	1	28
33469	OX_MTN	1	22
33469	OX_MTN	2	22
33469	OX_MTN	3	22
33469	OX_MTN	4	22
33469	OX_MTN	5	22
33469	OX_MTN	6	22
33469	OX_MTN	7	22
36863	DVRaGT1	1	21
36864	DVRbGt2	1	21
36865	DVRaST3	1	21
36859	Laf300	2	20
36859	Laf300	1	20
36858	Gia100	1	20
36895	Gia200	1	20

35861	SJ-SCL W	1	20
35854	LECEFGT1	1	20
35855	LECEFGT2	1	20
35856	LECEFGT3	1	20
35857	LECEFGT4	1	20
35858	LECEFST1	1	20
35860	OLS-AGNE	1	20
33468	SRI INTL	1	16
35304	RUSELCT1	1	12
35305	RUSELCT2	2	12
35306	RUSELST1	3	12
36209	SLD ENRG	1	9
36221	DUKMOSS1	1	7
36222	DUKMOSS2	1	7
36223	DUKMOSS3	1	7
36224	DUKMOSS4	1	7
36225	DUKMOSS5	1	7
36226	DUKMOSS6	1	7
30532	0162-WD	FW	7
39233	GRNRDG	1	6
33107	DEC STG1	1	6
33108	DEC CTG1	1	6
33109	DEC CTG2	1	6
33110	DEC CTG3	1	6
33102	COLUMBIA	1	6
33111	LMECCT2	1	6
33112	LMECCT1	1	6
33113	LMECST1	1	6
33136	CCCSD	1	6
33141	SHELL 1	1	6
33142	SHELL 2	1	6
33143	SHELL 3	1	6
33151	FOSTER W	1	6
33151	FOSTER W	2	6
33151	FOSTER W	3	6
32901	OAKLND 1	1	6
32902	OAKLND 2	1	6
32903	OAKLND 3	1	6
38118	ALMDACT1	1	6
38119	ALMDACT2	1	6
32910	UNOCAL	1	6

32910	UNOCAL	2	6
32910	UNOCAL	3	6
32920	UNION CH	1	5
33139	STAUFER	1	5
32741	HILLSIDE_12	1	5
32921	ChevGen1	1	5
32922	ChevGen2	1	5
32923	ChevGen3	3	5
32900	CRCKTCOG	1	5
33188	MARSHCT1	1	3
33189	MARSHCT2	2	3
33190	MARSHCT3	3	3
33191	MARSHCT4	4	3
33118	GATEWAY1	1	3
33119	GATEWAY2	1	3
33120	GATEWAY3	1	3
30522	0354-WD	EW	3
33178	RVEC_GEN	1	3
35310	PPASSWND	1	3

Table – San Diego

Effectiveness factors to the Sycamore – Suncrest 230 kV line:

Gen Bus	Gen Name	Gen ID	Eff. Factor (%)
23929	Q1669_ES	12	24
22124	CHCARITA	1	23
22487	MEF MR2	1	23
22486	MEF MR1	1	23
22120	CARLTNHS	1	23
22120	CARLTNHS	2	23
22915	KUMEYAAY	1	23
23871	Q1662_ES	1	22
22208	EL CAJON	13	22
23320	EC GEN2	1	22
23560	Q1047_BESS	1	22
23412	Q1434_G	10	22
22150	EC GEN1	1	22
22204	EASTGATE	1	22

22625	LkHodG1	1	22
22626	LkHodG2	1	22
22448	MESAHGTS	1	22
22496	MISSION	1	22
22092	CABRILLO	1	22
23933	Q1670_ES	12	22
22870	VALCNTR	59	22
22704	SAMPSON	1	22
22333	GOALLINE GEN	1	22
22333	GOALLINE GEN	2	22
23628	Q1191_G2	1	22
22074	LRKSPBD1	1	22
22075	LRKSPBD2	1	22
22604	OTAY	3	22
22604	OTAY	1	22
22617	OY GEN	1	22
22262	PEN_CT1	1	22
22149	CALPK_BD	1	21
22153	CALPK_ES	1	21
22257	ES GEN	1	21
22256	ESCNDIDO	12	21
22256	ESCNDIDO	11	21
22256	ESCNDIDO	10	21
23685	Q1045_GEN	C7	21
22263	PEN_CT2	1	21
22265	PEN_ST	1	21
23557	Q1048_BESS	C7	21
22724	SANMRCOS	1	21
22789	EA GEN1 U10	1	21
22783	EA GEN1 U8	1	20
22784	EA GEN1 U9	1	20
22786	EA GEN1 U6	1	20
22787	EA GEN1 U7	1	20
22628	PA GEN1	1	20
22629	PA GEN2	1	20
22606	OTAYMGT2	1	20

22605	OTAYMGT1	1	20
22607	OTAYMST1	1	20
23544	Q1169_BESS1	1	19
23162	PIO PICO 1A	1	19
23163	PIO PICO 1B	1	19
23164	PIO PICO 1C	1	19
23519	Q1169_BESS2	1	19
23841	Q1657_ES	12	17
22112	CAPSTRNO	1	17

ATTACHMENT B

List of Physical Resources Accounted for in the 2027 and 2031 Local Capacity Technical Report

ATTACHMENT A

List of physical resources accounted for in the 2027 and 2031 Local Capacity Technical Studies

! Attention !

This list is populated with 2026 NQC data where available.

This is not the offical NQC data for year 2027.

The official 2027 NQC data will be developed later and published on the ISO web site.

	The NQC for this resources can be found on the 2026 NQC list
ZZ_	These units are modeled in the base case however they cannot be matched to the NQC list
	These are new units not operational at the time of studies or represent a change to existing units once new resurces become operational
ZZZ_	Resources represented in the 2027 studies
ZZZZ_	Resources represented in the 2031 studies in addition to those already used in the 2026 study
	Current mathballed resources
	Resources expected to retire by a certain date or otherwise not beeing available
ZZZZZ_	Current retired resources
ZZZZZZ_	Current retired resources

Attachment A - List of physical resources accounted for in the 2027 and 2031 Local Capacity Technical Studies

Physical Res. 2027 LCR

	PTO Area	MKT/SCHED RESOURCE ID	BUS #	BUS NAME	kV	NQC	UNIT ID	LCR AREA NAME	LCR SUB-AREA NAME	NQC Comments	CAISO Tag
1	PG&E	ALMEGT_1_UNIT 1	38118	ALMDACT1	13.8	0.00	1	Bay Area	Oakland		MUNI
2	PG&E	ALMEGT_1_UNIT 2	38119	ALMDACT2	13.8	0.00	1	Bay Area	Oakland		MUNI
3	PG&E	BANKPP_2_NSPIN	38820	DELTA A	13.2	0.00	1	Bay Area	Contra Costa	Pumps	MUNI
4	PG&E	BANKPP_2_NSPIN	38820	DELTA A	13.2	0.00	2	Bay Area	Contra Costa	Pumps	MUNI
5	PG&E	BANKPP_2_NSPIN	38820	DELTA A	13.2	0.00	3	Bay Area	Contra Costa	Pumps	MUNI
6	PG&E	BANKPP_2_NSPIN	38815	DELTA B	13.2	0.00	4	Bay Area	Contra Costa	Pumps	MUNI
7	PG&E	BANKPP_2_NSPIN	38815	DELTA B	13.2	0.00	5	Bay Area	Contra Costa	Pumps	MUNI
8	PG&E	BANKPP_2_NSPIN	38770	DELTA C	13.2	0.00	6	Bay Area	Contra Costa	Pumps	MUNI
9	PG&E	BANKPP_2_NSPIN	38770	DELTA C	13.2	0.00	7	Bay Area	Contra Costa	Pumps	MUNI
10	PG&E	BANKPP_2_NSPIN	38765	DELTA D	13.2	0.00	8	Bay Area	Contra Costa	Pumps	MUNI
11	PG&E	BANKPP_2_NSPIN	38765	DELTA D	13.2	0.00	9	Bay Area	Contra Costa	Pumps	MUNI
12	PG&E	BANKPP_2_NSPIN	38760	DELTA E	13.2	0.00	10	Bay Area	Contra Costa	Pumps	MUNI
13	PG&E	BANKPP_2_NSPIN	38760	DELTA E	13.2	0.00	11	Bay Area	Contra Costa	Pumps	MUNI
14	PG&E	BLKDIA_2_BDEBT1	365773	Q1111BES	0.69	0.00	1	Bay Area	Pittsburg		Battery
15	PG&E	BRDSLD_2_HIWIND	32172	HIGHWINDS	34.5	0.00	1	Bay Area	Contra Costa	Aug NQC	Wind
16	PG&E	BRDSLD_2_MTZUM2	32179	MONTEZUM	0.69	0.00	1	Bay Area	Contra Costa	Aug NQC	Wind
17	PG&E	BRDSLD_2_MTZUMA	32188	MONTEZUM	0.69	0.00	1	Bay Area	Contra Costa	Aug NQC	Wind
18	PG&E	BRDSLD_2_SHILO1	32181	SHILOH1W	34.5	0.00	1	Bay Area	Contra Costa	Aug NQC	Wind
19	PG&E	BRDSLD_2_SHILO2	365749	SHILOH2WIND	0.58	0.00	1	Bay Area	Contra Costa	Aug NQC	Wind
20	PG&E	BRDSLD_2_SHLO3A	32191	SHILOH3W	0.58	0.00	1	Bay Area	Contra Costa	Aug NQC	Wind
21	PG&E	BRDSLD_2_SHLO3B	32194	SHILOH4W	0.58	0.00	1	Bay Area	Contra Costa	Aug NQC	Wind
22	PG&E	CALPIN_1_AGNEW	35860	AGNEWCOG	13.8	0.00	1	Bay Area	San Jose, South Bay-Moss Landing	Aug NQC	Market
23	PG&E	CALPIN_1_AGNEW	35860	AGNEWCOG	13.8	0.00	2	Bay Area	San Jose, South Bay-Moss Landing	Aug NQC	Market
24	PG&E	CAYTNO_2_VASCO				0.00		Bay Area	Contra Costa	Not modeled Aug NQC	Market
25	PG&E	CLRMTK_1_QF				0.00		Bay Area	Oakland	Not modeled	QF/Selfgen
26	PG&E	COCOPP_2_CTG1	33188	MARSHCT1	16.4	0.00	1	Bay Area	Contra Costa	Aug NQC	Market
27	PG&E	COCOPP_2_CTG2	33189	MARSHCT2	16.4	0.00	2	Bay Area	Contra Costa	Aug NQC	Market
28	PG&E	COCOPP_2_CTG3	33190	MARSHCT3	16.4	0.00	3	Bay Area	Contra Costa	Aug NQC	Market
29	PG&E	COCOPP_2_CTG4	33191	MARSHCT4	16.4	0.00	4	Bay Area	Contra Costa	Aug NQC	Market
30	PG&E	COCOSB_6_SOLAR				0.00		Bay Area	Contra Costa	Not modeled Energy Only	Solar

Attachment A - List of physical resources accounted for in the 2027 and 2031 Local Capacity Technical Studies
Physical Res. 2027 LCR

31	PG&E	CROKET_7_UNIT	32900	CRCKTCOG	18	0.00	1	Bay Area	Pittsburg	Aug NQC	QF/Selfgen
32	PG&E	CSCGNR_1_UNIT 1	36858	Gia100	13.8	0.00	1	Bay Area	San Jose, South Bay-Moss Landing		MUNI
33	PG&E	CSCGNR_1_UNIT 2	36895	Gia200	13.8	0.00	2	Bay Area	San Jose, South Bay-Moss Landing		MUNI
34	PG&E	CUMBIA_1_SOLAR	33102	COLUMBIA	0.38	0.00	1	Bay Area	Pittsburg	Aug NQC	Solar
35	PG&E	DELTA_2_PL1X4	33108	DEC CTG1	18	0.00	1	Bay Area	Pittsburg	Aug NQC	Market
36	PG&E	DELTA_2_PL1X4	33109	DEC CTG2	18	0.00	1	Bay Area	Pittsburg	Aug NQC	Market
37	PG&E	DELTA_2_PL1X4	33110	DEC CTG3	18	0.00	1	Bay Area	Pittsburg	Aug NQC	Market
38	PG&E	DELTA_2_PL1X4	33107	DEC STG1	24	0.00	1	Bay Area	Pittsburg	Aug NQC	Market
39	PG&E	DIXNLD_1_LNDFL				0.00		Bay Area		Not modeled Aug NQC	Market
40	PG&E	DUANE_1_PL1X3	36863	DVRaGT1	13.8	0.00	1	Bay Area	San Jose, South Bay-Moss Landing		MUNI
41	PG&E	DUANE_1_PL1X3	36865	DVRaST3	13.8	0.00	1	Bay Area	San Jose, South Bay-Moss Landing		MUNI
42	PG&E	DUANE_1_PL1X3	36864	DVRbGT2	13.8	0.00	1	Bay Area	San Jose, South Bay-Moss Landing		MUNI
43	PG&E	ELKHRN_1_EESX3	366107	ELKHORNESBS1	0.51	0.00	M1	Bay Area	South Bay-Moss Landing		Battery
44	PG&E	ELKHRN_1_EESX3	366108	ELKHORNESBS2	0.51	0.00	M2	Bay Area	South Bay-Moss Landing		Battery
45	PG&E	ELKHRN_1_EESX3	366109	ELKHORNESBS3	0.51	0.00	M3	Bay Area	South Bay-Moss Landing		Battery
46	PG&E	GATWAY_2_PL1X3	33118	GATEWAY1	18	0.00	1	Bay Area	Contra Costa	Aug NQC	Market
47	PG&E	GATWAY_2_PL1X3	33119	GATEWAY2	18	0.00	1	Bay Area	Contra Costa	Aug NQC	Market
48	PG&E	GATWAY_2_PL1X3	33120	GATEWAY3	18	0.00	1	Bay Area	Contra Costa	Aug NQC	Market
49	PG&E	GILROY_1_UNIT	35850	GILROYEN	13.8	0.00	1	Bay Area	Llagas, San Jose, South Bay-Moss Landing	Aug NQC	Market
50	PG&E	GILROY_1_UNIT	35871	GILROYEN	13.8	0.00	2	Bay Area	Llagas, San Jose, South Bay-Moss Landing	Aug NQC	Market
51	PG&E	GILRPP_1_PL1X2	35851	GROYPKR1	13.8	0.00	1	Bay Area	Llagas, San Jose, South Bay-Moss Landing	Aug NQC	Market
52	PG&E	GILRPP_1_PL1X2	35852	GROYPKR2	13.8	0.00	1	Bay Area	Llagas, San Jose, South Bay-Moss Landing	Aug NQC	Market

Attachment A - List of physical resources accounted for in the 2027 and 2031 Local Capacity Technical Studies
Physical Res. 2027 LCR

53	PG&E	GILRPP_1_PL3X4	35853	GROYPKR3	13.8	0.00	1	Bay Area	Llagas, San Jose, South Bay-Moss Landing	Aug NQC	Market
54	PG&E	GRZZLY_1_BERKLY	32741	HILLSIDE_12	12.5	0.00	1	Bay Area		Aug NQC	Net Seller
55	PG&E	KELSO_2_UNITS	33813	MARIPCT1	13.8	0.00	1	Bay Area	Contra Costa	Aug NQC	Market
56	PG&E	KELSO_2_UNITS	33815	MARIPCT2	13.8	0.00	2	Bay Area	Contra Costa	Aug NQC	Market
57	PG&E	KELSO_2_UNITS	33817	MARIPCT3	13.8	0.00	3	Bay Area	Contra Costa	Aug NQC	Market
58	PG&E	KELSO_2_UNITS	33819	MARIPCT4	13.8	0.00	4	Bay Area	Contra Costa	Aug NQC	Market
59	PG&E	KIRKER_7_KELCYN				0.00		Bay Area	Pittsburg	Not modeled	Market
60	PG&E	LAWRNC_7_SUNYVL				0.00		Bay Area		Not modeled Aug NQC	Market
61	PG&E	LECEF_1_UNITS	35854	LECEFGT1	13.8	0.00	1	Bay Area	San Jose, South Bay-Moss Landing	Aug NQC	Market
62	PG&E	LECEF_1_UNITS	35855	LECEFGT2	13.8	0.00	1	Bay Area	San Jose, South Bay-Moss Landing	Aug NQC	Market
63	PG&E	LECEF_1_UNITS	35856	LECEFGT3	13.8	0.00	1	Bay Area	San Jose, South Bay-Moss Landing	Aug NQC	Market
64	PG&E	LECEF_1_UNITS	35857	LECEFGT4	13.8	0.00	1	Bay Area	San Jose, South Bay-Moss Landing	Aug NQC	Market
65	PG&E	LECEF_1_UNITS	35858	LECEFST1	13.8	0.00	1	Bay Area	San Jose, South Bay-Moss Landing		Market
66	PG&E	LMBEPK_2_UNITA1	32173	LAMBIE	13.8	0.00	1	Bay Area	Contra Costa	Aug NQC	Market
67	PG&E	LMBEPK_2_UNITA2	32174	GOOSEHAV	13.8	0.00	3	Bay Area	Contra Costa	Aug NQC	Market
68	PG&E	LMBEPK_2_UNITA3	32175	CREED	13.8	0.00	2	Bay Area	Contra Costa	Aug NQC	Market
69	PG&E	LMEC_1_PL1X3	33112	LMECCT1	18	0.00	1	Bay Area	Pittsburg	Aug NQC	Market
70	PG&E	LMEC_1_PL1X3	33111	LMECCT2	18	0.00	1	Bay Area	Pittsburg	Aug NQC	Market
71	PG&E	LMEC_1_PL1X3	33113	LMECST1	18	0.00	1	Bay Area	Pittsburg	Aug NQC	Market
72	PG&E	MARTIN_1_SUNSET				0.00		Bay Area		Not modeled Aug NQC	QF/Selfgen
73	PG&E	METEC_2_PL1X3	35881	MEC CTG1	18	0.00	1	Bay Area	South Bay-Moss Landing	Aug NQC	Market
74	PG&E	METEC_2_PL1X3	35882	MEC CTG2	18	0.00	1	Bay Area	South Bay-Moss Landing	Aug NQC	Market
75	PG&E	METEC_2_PL1X3	35883	MEC STG1	18	0.00	1	Bay Area	South Bay-Moss Landing	Aug NQC	Market
76	PG&E	MISSIX_1_QF	33250	MISSON_D4	12.5	0.00	1	Bay Area	Ames	Aug NQC	QF/Selfgen
77	PG&E	MLPTAS_7_QFUNTS				0.00		Bay Area	San Jose, South Bay-Moss Landing	Not modeled Aug NQC	QF/Selfgen

Attachment A - List of physical resources accounted for in the 2027 and 2031 Local Capacity Technical Studies
Physical Res. 2027 LCR

78	PG&E	MOSSLD_2_PSP1	36221	MLB1CTG1	18	0.00	1	Bay Area	South Bay-Moss Landing		Market
79	PG&E	MOSSLD_2_PSP1	36222	MLB1CTG2	18	0.00	1	Bay Area	South Bay-Moss Landing		Market
80	PG&E	MOSSLD_2_PSP1	36223	MLB1STG1	18	0.00	1	Bay Area	South Bay-Moss Landing		Market
81	PG&E	MOSSLD_2_PSP2	36224	MLB2CTG3	18	0.00	1	Bay Area	South Bay-Moss Landing		Market
82	PG&E	MOSSLD_2_PSP2	36225	MLB2CTG4	18	0.00	1	Bay Area	South Bay-Moss Landing		Market
83	PG&E	MOSSLD_2_PSP2	36226	MLB2STG2	18	0.00	1	Bay Area	South Bay-Moss Landing		Market
84	PG&E	NEWARK_1_QF				0.00		Bay Area		Not modeled Aug NQC	QF/Selfgen
85	PG&E	OAK C_1_EBMUD				0.00		Bay Area	Oakland	Not modeled Aug NQC	MUNI
86	PG&E	OAK C_7_UNIT 1	32901	OAKLND 1	13.8	0.00	1	Bay Area	Oakland		Market
87	PG&E	OAK C_7_UNIT 3	32903	OAKLND 3	13.8	0.00	3	Bay Area	Oakland		Market
88	PG&E	OAK L_1_GTG1				0.00		Bay Area	Oakland	Not modeled Energy Only	Market
89	PG&E	OXMTN_6_LNDFIL	33469	OX_MTN	4.16	0.00	1	Bay Area	Ames		Market
90	PG&E	OXMTN_6_LNDFIL	33469	OX_MTN	4.16	0.00	2	Bay Area	Ames		Market
91	PG&E	OXMTN_6_LNDFIL	33469	OX_MTN	4.16	0.00	3	Bay Area	Ames		Market
92	PG&E	OXMTN_6_LNDFIL	33469	OX_MTN	4.16	0.00	4	Bay Area	Ames		Market
93	PG&E	OXMTN_6_LNDFIL	33469	OX_MTN	4.16	0.00	5	Bay Area	Ames		Market
94	PG&E	OXMTN_6_LNDFIL	33469	OX_MTN	4.16	0.00	6	Bay Area	Ames		Market
95	PG&E	OXMTN_6_LNDFIL	33469	OX_MTN	4.16	0.00	7	Bay Area	Ames		Market
96	PG&E	RICHMN_1_CHVSR2				0.00		Bay Area		Not modeled Aug NQC	Solar
97	PG&E	RICHMN_1_SOLAR				0.00		Bay Area		Not modeled Aug NQC	Solar
98	PG&E	RICHMN_7_BAYENV				0.00		Bay Area		Not modeled Aug NQC	Market
99	PG&E	RUSCTY_2_UNITS	35304	RUSELCT1	15	0.00	1	Bay Area	Ames	No NQC - Pmax	Market
100	PG&E	RUSCTY_2_UNITS	35305	RUSELCT2	15	0.00	2	Bay Area	Ames	No NQC - Pmax	Market
101	PG&E	RUSCTY_2_UNITS	35306	RUSELST1	15	0.00	3	Bay Area	Ames	No NQC - Pmax	Market
102	PG&E	RUSSELL_2_SOLANO1	365566	SOLANO1W	0.69	0.00	1	Bay Area	Contra Costa	Aug NQC	Wind
103	PG&E	RUSSELL_2_SOLANO1	365574	SOLANO2W	1	0.00	2	Bay Area	Contra Costa	Aug NQC	Wind

Attachment A - List of physical resources accounted for in the 2027 and 2031 Local Capacity Technical Studies
Physical Res. 2027 LCR

104	PG&E	RUSSELL_2_SOLANO1	365600	SOLANO3W	1	0.00	3	Bay Area	Contra Costa	Aug NQC	Wind
105	PG&E	RVRVEW_1_UNITA1	33178	RVEC_GEN	13.8	0.00	1	Bay Area	Contra Costa		Market
106	PG&E	SHELRF_1_UNITS	33141	SHELL 1	12.5	0.00	1	Bay Area	Pittsburg	Aug NQC	Net Seller
107	PG&E	SHELRF_1_UNITS	33142	SHELL 2	12.5	0.00	1	Bay Area	Pittsburg	Aug NQC	Net Seller
108	PG&E	SHELRF_1_UNITS	33143	SHELL 3	12.5	0.00	1	Bay Area	Pittsburg	Aug NQC	Net Seller
109	PG&E	SRINTL_6_UNIT	33468	SRI INTL	9.11	0.00	1	Bay Area		Aug NQC	QF/Selfgen
110	PG&E	STOILS_1_UNITS	32921	CHEVGEN1	13.8	0.00	1	Bay Area	Pittsburg	Aug NQC	Market
111	PG&E	STOILS_1_UNITS	32922	CHEVGEN2	13.8	0.00	1	Bay Area	Pittsburg	Aug NQC	Market
112	PG&E	STOILS_1_UNITS	32923	CHEVGEN3	13.8	0.00	3	Bay Area	Pittsburg	Aug NQC	Market
113	PG&E	TIDWTR_2_UNITS	33151	FOSTER W	12.5	0.00	1	Bay Area	Pittsburg	Aug NQC	Net Seller
114	PG&E	TIDWTR_2_UNITS	33151	FOSTER W	12.5	0.00	2	Bay Area	Pittsburg	Aug NQC	Net Seller
115	PG&E	TIDWTR_2_UNITS	33151	FOSTER W	12.5	0.00	3	Bay Area	Pittsburg	Aug NQC	Net Seller
116	PG&E	UNOCAL_1_UNITS	32910	UNOCAL	12	0.00	1	Bay Area	Pittsburg	Aug NQC	QF/Selfgen
117	PG&E	UNOCAL_1_UNITS	32910	UNOCAL	12	0.00	2	Bay Area	Pittsburg	Aug NQC	QF/Selfgen
118	PG&E	UNOCAL_1_UNITS	32910	UNOCAL	12	0.00	3	Bay Area	Pittsburg	Aug NQC	QF/Selfgen
119	PG&E	USWNDR_2_LABWD1	365729	LABRISAWIND	0.58	0.00	1	Bay Area	Contra Costa	Aug NQC	Wind
120	PG&E	USWPFK_6_FRICK	365608	FRICKWIND	0.69	0.00	1	Bay Area	Contra Costa	Aug NQC	Wind
121	PG&E	USWPJR_2_UNITS	39233	WASCOWIND	0.69	0.00	1	Bay Area	Contra Costa	Aug NQC	Wind
122	PG&E	VISTRA_5_DALBT1	366711	DALLASBESS1	34.5	0.00	M1	Bay Area	South Bay-Moss Landing	Retired	Battery
123	PG&E	VISTRA_5_DALBT2	366712	DALLASBESS2	34.5	0.00	M2	Bay Area	South Bay-Moss Landing	Retired	Battery
124	PG&E	VISTRA_5_DALBT3	366713	DALLASBESS3	34.5	0.00	M3	Bay Area	South Bay-Moss Landing	Retired	Battery
125	PG&E	VISTRA_5_DALBT4	366715	DALLASBESS4	34.5	0.00	M4	Bay Area	South Bay-Moss Landing		Battery
126	PG&E	VISTRA_5_PLABT1	366244	PLANOBESS4	34.5	0.00	M4	Bay Area	South Bay-Moss Landing		Battery
127	PG&E	VISTRA_5_PLABT2	366243	PLANOBESS3	34.5	0.00	M3	Bay Area	South Bay-Moss Landing		Battery
128	PG&E	VISTRA_5_PLABT3	366242	PLANOBESS2	34.5	0.00	M2	Bay Area	South Bay-Moss Landing		Battery
129	PG&E	VISTRA_5_PLABT4	366241	PLANOBESS1	34.5	0.00	M1	Bay Area	South Bay-Moss Landing		Battery

Attachment A - List of physical resources accounted for in the 2027 and 2031 Local Capacity Technical Studies
Physical Res. 2027 LCR

130	PG&E	WNDMAS_2_UNIT 1	33173	BVISTAWND	0.6	0.00	1	Bay Area	Contra Costa	Aug NQC	Wind
131	PG&E	ZOND_6_UNIT				0.00		Bay Area	Contra Costa	Not modeled Aug NQC	Wind
132	PG&E	ZZ_FLOWD1_6_ALTPP1	35318	FLOWPTR	9.11	0.00	1	Bay Area	Contra Costa	No NQC - est. data	Wind
133	PG&E	ZZ_IMHOFF_1_UNIT 1	33136	CCCSD	12.5	0.00	1	Bay Area	Pittsburg	No NQC - hist. data	QF/Selfgen
134	PG&E	ZZ_MOSSLD_1_QF				0.00		Bay Area		Not modeled Aug NQC	QF/Selfgen
135	PG&E	ZZ_NA	35861	SJ-SCL W	4.3	0.00	1	Bay Area	San Jose, South Bay-Moss Landing	No NQC - hist. data	QF/Selfgen
136	PG&E	ZZ_NA	36209	SLD ENRG	12.5	0.00	1	Bay Area	South Bay-Moss Landing		QF/Selfgen
137	PG&E	ZZ_ZANKER_1_UNIT 1	35861	SJ-SCL W	4.3	0.00	RN	Bay Area	San Jose, South Bay-Moss Landing	No NQC - hist. data	QF/Selfgen
138	PG&E	ZZZ_New Unit	38921	BESS_SVP	60	0.00	1	Bay Area	San Jose, South Bay-Moss Landing	Waiting TPD allocation	Battery
139	PG&E	ZZZ_New Unit	365540	CHEVRONS	12.5	0.00	1	Bay Area		Energy Only	Market
140	PG&E	ZZZ_New Unit	365685	P66RODEO_1	12	0.00	1	Bay Area	Pittsburg	Energy Only	Market
141	PG&E	ZZZ_New Unit	366328	Q1349SPV	0.55	0.00	1	Bay Area	Contra Costa	Energy Only	Solar
142	PG&E	ZZZ_New Unit	366400	Q1457BESS	0.48	3.00	1	Bay Area	San Jose, South Bay-Moss Landing		Battery
143	PG&E	ZZZ_New Unit	365348	HOLLISTER_D1	21	10.00	1	Bay Area	South Bay-Moss Landing	No NQC - est. data	Battery
144	PG&E	ZZZ_New Unit	365342	MRGNHILL_D1	21	20.00	1	Bay Area	Llagas, San Jose, South Bay-Moss Landing	No NQC - est. data	Battery
145	PG&E	ZZZ_New Unit	366394	Q1454B	0.69	75.00	1	Bay Area	San Jose, South Bay-Moss Landing	No NQC - est. data	Battery
146	PG&E	ZZZ_New Unit	366252	Q1552BESS	0.48	250.00	1	Bay Area			Battery
147	PG&E	ZZZ_New Unit	32172	HIGHWINDS	34.5	0.00	2	Bay Area	Contra Costa	Energy Only	Wind
148	PG&E	ZZZ_New Unit	32741	HILLSIDE_12	12.5	0.00	2	Bay Area		Energy Only	Market
149	PG&E	ZZZ_New Unit	366609	OAKLANDES2	13.8	55.00	2	Bay Area	Oakland		Battery
150	PG&E	ZZZ_New Unit	366330	Q1349BESS	0.55	100.00	2	Bay Area	Contra Costa	No NQC - est. data	Battery
151	PG&E	ZZZ_New Unit	366380	SOLANO4WIND	0.72	19.74	4	Bay Area	Contra Costa	No NQC - est. data	Wind
152	PG&E	ZZZ_New Unit	92154	2154-WD	230	0.00	EW	Bay Area	Contra Costa	Energy Only	Solar
153	PG&E	ZZZ_New Unit	92296	2296-WD	230	0.00	EW	Bay Area	Contra Costa	Energy Only	Solar
154	PG&E	ZZZ_New Unit	92333	2333-WD	230	0.00	EW	Bay Area	Contra Costa	Energy Only	Solar

Attachment A - List of physical resources accounted for in the 2027 and 2031 Local Capacity Technical Studies
Physical Res. 2027 LCR

155	PG&E	ZZZ_New Unit	92597	2597-WD	115	0.00	EW	Bay Area		No NQC - est. data	Solar
156	PG&E	ZZZ_New Unit	92598	2598-WD	230	0.00	EW	Bay Area	Contra Costa	Energy Only	Solar
157	PG&E	ZZZ_New Unit	92495	2495-WD	115	10.00	FW	Bay Area	South Bay-Moss Landing	No NQC - est. data	Battery
158	PG&E	ZZZ_New Unit	365688	2509-RD-SPV	0.63	0.00	RE	Bay Area	Pittsburg	Energy Only	Solar
159	PG&E	ZZZ_New Unit	36232	CAMPEVERS_D1	21.6	0.00	RE	Bay Area	South Bay-Moss Landing	Energy Only	Solar
160	PG&E	ZZZ_New Unit	35863	CATALYST	12.5	0.00	RE	Bay Area	San Jose, South Bay-Moss Landing	Energy Only	Solar
161	PG&E	ZZZ_New Unit	33450	FACEBOOKBH	12	0.00	RE	Bay Area	Ames	Energy Only	Solar
162	PG&E	ZZZ_New Unit	365338	GRANITEROCK	4.16	0.00	RE	Bay Area	South Bay-Moss Landing	Energy Only	Solar
163	PG&E	ZZZ_New Unit	327930	SCHNITZ_D1	12.5	0.00	RE	Bay Area	Oakland	Energy Only	Solar
164	PG&E	ZZZ_New Unit	33103	TASSAJARA_D1	21.6	0.00	RE	Bay Area	Pittsburg	Energy Only	Solar
165	PG&E	ZZZ_New Unit	35307	A100US-L	12.6	0.00	RN	Bay Area		Energy Only	Market
166	PG&E	ZZZ_New Unit	35859	HGST-LV	12.4	0.00	RN	Bay Area	San Jose, South Bay-Moss Landing	Energy Only	Market
167	PG&E	ZZZ_New Unit	32741	HILLSIDE_12	12.5	0.00	RN	Bay Area		Energy Only	Market
168	PG&E	ZZZ_New Unit	35302	NUMMI-LV	12.6	0.00	RN	Bay Area		Energy Only	Market
169	PG&E	ZZZ_New Unit	365559	STANFORD	12.5	0.00	RN	Bay Area	South Bay-Moss Landing	Energy Only	Market
170	PG&E	ADERA_1_SOLAR1	34319	ADERASLR	0.48	0.00	1	Fresno	Panoche 115 kV, Wilson 115 kV	Energy Only	Solar
171	PG&E	ADMEST_6_SOLAR	34315	ADAMS_E	12.5	0.00	1	Fresno			Solar
172	PG&E	AGRICO_6_PL3N5	34608	AGRICO	13.8	0.00	3	Fresno			Market
173	PG&E	AGRICO_7_UNIT	34608	AGRICO	13.8	0.00	2	Fresno			Market
174	PG&E	AGRICO_7_UNIT	34608	AGRICO	13.8	0.00	4	Fresno			Market
175	PG&E	AKINGS_6_AMESR1	34688	AMRCNKNG	0.36	0.00	1	Fresno		Aug NQC	Solar
176	PG&E	AVENAL_6_AVPARK	34265	AVENAL P	12	0.00	1	Fresno	Coalinga	Aug NQC	Solar
177	PG&E	AVENAL_6_AVSLR1	346912	AVENAPSPV1	0.39	0.00	1	Fresno	Coalinga	Energy Only	Solar
178	PG&E	AVENAL_6_AVSLR2	346914	AVENAPSPV2	0.39	0.00	2	Fresno	Coalinga	Energy Only	Solar
179	PG&E	AVENAL_6_SANDDG	34263	SANDDRAG	12	0.00	1	Fresno	Coalinga	Aug NQC	Solar
180	PG&E	AVENAL_6_SUNCTY	34257	SUNCTY D	12	0.00	1	Fresno	Coalinga	Aug NQC	Solar
181	PG&E	BALCHS_7_UNIT 1	34624	BALCH 1	13.2	0.00	1	Fresno	Herndon	Aug NQC	Market
182	PG&E	BALCHS_7_UNIT 2	34612	BLCH 2-3	13.8	0.00	1	Fresno	Herndon	Aug NQC	Market
183	PG&E	BALCHS_7_UNIT 3	34614	BLCH 2-3	13.8	0.00	1	Fresno	Herndon	Aug NQC	Market

Attachment A - List of physical resources accounted for in the 2027 and 2031 Local Capacity Technical Studies
Physical Res. 2027 LCR

184	PG&E	CABALO_2_M2BSR1	365524	MUSTANG4	0.36	0.00	2	Fresno		Aug NQC	Solar
185	PG&E	CABALO_2_M2WSR2	365523	MUSTANG3	0.36	0.00	1	Fresno		Aug NQC	Solar
186	PG&E	CANTUA_1_SOLAR	34349	CANTUA_D	12.5	0.00	1	Fresno	Panoche 115 kV	Aug NQC	Solar
187	PG&E	CANTUA_1_SOLAR	34349	CANTUA_D	12.5	0.00	2	Fresno	Panoche 115 kV	Aug NQC	Solar
188	PG&E	CHEVCO_6_UNIT 1	34652	CHV.COAL	9.11	0.00	1	Fresno	Coalinga, Panoche 115 kV	Aug NQC	QF/Selfgen
189	PG&E	CHEVCO_6_UNIT 2	34652	CHV.COAL	9.11	0.00	2	Fresno	Coalinga, Panoche 115 kV	Aug NQC	QF/Selfgen
190	PG&E	CHWCHL_1_AVSSR1				0.00		Fresno	Panoche 115 kV, Wilson 115 kV	Not Modeled Energy Only	Solar
191	PG&E	CHWCHL_1_AVSSR2				0.00		Fresno	Panoche 115 kV, Wilson 115 kV	Not Modeled Energy Only	Solar
192	PG&E	CHWCHL_1_UNIT	34301	CHOWCOGN	13.8	0.00	1	Fresno	Panoche 115 kV, Wilson 115 kV		Market
193	PG&E	CORCAN_1_SOLAR1	34692	CORCORAN_D4	12.5	0.00	1	Fresno	Herndon, Hanford	Aug NQC	Solar
194	PG&E	CORCAN_1_SOLAR2	346906	CORCORAN2SPV	0.36	0.00	1	Fresno	Herndon, Hanford	Aug NQC	Solar
195	PG&E	CRESSY_1_PARKER				0.00		Fresno		Not modeled Aug NQC	MUNI
196	PG&E	CRNEVL_6_CRNVA	34634	CRANEVLY	12	0.00	1	Fresno	Borden	Aug NQC	Market
197	PG&E	CRNEVL_6_SJQN 2	34631	SJ2GEN	9.11	0.00	1	Fresno	Borden	Aug NQC	Market
198	PG&E	CURTIS_1_CANLCK				0.00		Fresno		Not modeled Aug NQC	Market
199	PG&E	CURTIS_1_FARFLD				0.00		Fresno		Not modeled Aug NQC	Market
200	PG&E	DAIRLD_1_MD1SL1				0.00		Fresno	Herndon, Panoche 115 kV, Wilson 115 kV	Not modeled Energy Only	Solar
201	PG&E	DAIRLD_1_MD2BM1				0.00		Fresno	Herndon, Panoche 115 kV, Wilson 115 kV	Not modeled Energy Only	Market
202	PG&E	EEKTMN_6_SOLAR1	34629	KETTLEMN	0.8	0.00	1	Fresno		Energy Only	Solar
203	PG&E	ELCAP_1_SOLAR				0.00		Fresno		Not Modeled Aug NQC	Solar
204	PG&E	ELNIDO_1_ECRSR1	92799	2799-WD	115	0.00	EW	Fresno	Panoche 115 kV	Energy Only	Solar
205	PG&E	EXCHEC_7_UNIT 1	34306	EXCHQUER	13.8	0.00	1	Fresno	Panoche 115 kV, Wilson 115 kV	Aug NQC	MUNI
206	PG&E	EXCLSG_1_SOLAR	34623	EXCLSRSL	0.5	0.00	1	Fresno	Panoche 115 kV	Aug NQC	Solar
207	PG&E	FRESHW_1_SOLAR1	34699	FRSHWTRSLR	0.39	0.00	1	Fresno	Herndon, Hanford	Energy Only	Solar
208	PG&E	FRIANT_6_UNITS	34636	FRIANTDAM	6.6	0.00	2	Fresno	Borden	Aug NQC	Net Seller
209	PG&E	FRIANT_6_UNITS	34636	FRIANTDAM	6.6	0.00	3	Fresno	Borden	Aug NQC	Net Seller

210	PG&E	FRIANT_6_UNITS	34636	FRIANTDAM	6.6	0.00	4	Fresno	Borden	Aug NQC	Net Seller
211	PG&E	GIFENS_6_BUGSL1	34644	BRFRDGFNSPV	0.55	0.00	1	Fresno		Aug NQC	Solar
212	PG&E	GIFFEN_6_SOLAR	34467	GIFFEN_DIST	12.5	0.00	1	Fresno		Aug NQC	Solar
213	PG&E	GIFFEN_6_SOLAR1				0.00		Fresno		Not modeled Energy Only	Solar
214	PG&E	GUERNS_6_HD3BM3				0.00		Fresno		Not modeled Energy Only	Market
215	PG&E	GUERNS_6_SOLAR	34463	GUERNSEY_D2	12.5	0.00	5	Fresno		Aug NQC	Solar
216	PG&E	GUERNS_6_SOLAR	34461	GUERNSEY_D1	12.5	0.00	8	Fresno		Aug NQC	Solar
217	PG&E	GUERNS_6_VH2BM1				0.00		Fresno		Not modeled Energy Only	Market
218	PG&E	GWFPWR_1_HPPBT1	365188	HANFORDHBES	0.69	0.00	1	Fresno	Herndon, Hanford		Battery
219	PG&E	GWFPWR_1_LDCTG1	34431	HANFORDPPCT1	13.8	0.00	1	Fresno	Herndon, Hanford		Market
220	PG&E	GWFPWR_1_LDCTG2	34433	HANFORDPPCT2	13.8	0.00	1	Fresno	Herndon, Hanford		Market
221	PG&E	GWFPWR_1_LEDBT1	365767	Q1713BESS	0.69	0.00	1	Fresno	Herndon, Hanford		Battery
222	PG&E	HAASPH_7_PL1X2	34610	HAAS	13.8	0.00	1	Fresno	Herndon	Aug NQC	Market
223	PG&E	HAASPH_7_PL1X2	34610	HAAS	13.8	0.00	2	Fresno	Herndon	Aug NQC	Market
224	PG&E	HARDWK_6_STWBM1				0.00		Fresno		Not modeled Energy Only	Market
225	PG&E	HELMPG_7_UNIT 1	34600	HELMS	18	0.00	1	Fresno		Aug NQC	Market
226	PG&E	HELMPG_7_UNIT 2	34602	HELMS	18	0.00	2	Fresno		Aug NQC	Market
227	PG&E	HELMPG_7_UNIT 3	34604	HELMS	18	0.00	3	Fresno		Aug NQC	Market
228	PG&E	HENRTA_6_ACDSR3	92796	2796-WD	230	0.00	EW	Fresno		Energy Only	Solar
229	PG&E	HENRTA_6_ELCTG1	34539	GWF_GT1	13.8	0.00	1	Fresno			Market
230	PG&E	HENRTA_6_ELCTG2	34541	GWF_GT2	13.8	0.00	1	Fresno			Market
231	PG&E	HENRTA_6_HDEBT1	365115	HENRTADESBS	0.55	0.00	1	Fresno			Battery
232	PG&E	HENRTA_6_SOLAR1				0.00		Fresno		Not modeled Aug NQC	Solar
233	PG&E	HENRTA_6_SOLAR2				0.00		Fresno		Not modeled Energy Only	Solar
234	PG&E	HENRTS_1_SOLAR	34617	HNRTASOLARPV	0.39	0.00	1	Fresno	Herndon, Hanford	Aug NQC	Solar
235	PG&E	HURON_6_SOLAR	34557	HURON_DI	12.5	0.00	1	Fresno	Coalinga, Panoche 115 kV	Aug NQC	Solar
236	PG&E	HURON_6_SOLAR	34557	HURON_DI	12.5	0.00	2	Fresno	Coalinga, Panoche 115 kV	Aug NQC	Solar
237	PG&E	JAVASR_1_JAVSR1	34649	JAVASLRSPV	0.6	0.00	1	Fresno	Herndon, Hanford	Aug NQC	Solar

Attachment A - List of physical resources accounted for in the 2027 and 2031 Local Capacity Technical Studies
Physical Res. 2027 LCR

238	PG&E	JAYNE_6_WLSLR	34639	WESTLNDS	0.48	0.00	1	Fresno	Coalinga	Energy Only	Solar
239	PG&E	KANSAS_6_SOLAR	34666	KANSASS_S	12.5	0.00	F	Fresno		Energy Only	Solar
240	PG&E	KERKH2_7_UNIT 1	34308	KERCKHOF	13.8	0.00	1	Fresno	Herndon, Wilson 115 kV	Aug NQC	Market
241	PG&E	KERMAN_6_SOLAR1				0.00		Fresno		Not modeled Energy Only	Solar
242	PG&E	KERMAN_6_SOLAR2				0.00		Fresno		Not modeled Energy Only	Solar
243	PG&E	KERNEY_6_FCSSR1	34668	KEARNEY_D1	12.5	0.00	1	Fresno		Energy Only	Solar
244	PG&E	KINGCO_1_KINGBR	34642	KINGSBUR	13.8	0.00	1	Fresno	Herndon, Hanford	Aug NQC	Net Seller
245	PG&E	KINGCO_1_KINGBR	34642	KINGSBUR	13.8	0.00	2	Fresno	Herndon, Hanford	Aug NQC	Net Seller
246	PG&E	KINGRV_7_UNIT 1	34616	KINGSRIV	13.8	0.00	1	Fresno	Herndon, Reedley	Aug NQC	Market
247	PG&E	KNGBRG_1_KBSLR1				0.00		Fresno		Not modeled Energy Only	Solar
248	PG&E	KNGBRG_1_KBSLR2				0.00		Fresno		Not modeled Energy Only	Solar
249	PG&E	KNTSTH_6_SOLAR	34694	KENT_S	0.8	0.00	1	Fresno		Energy Only	Solar
250	PG&E	KNTSTH_6_WALSR1	365679	WSTALMONDSPV	0.63	0.00	1	Fresno		Energy Only	Solar
251	PG&E	LEPRFD_1_KANSAS	346802	KANSASSLRPV	0.69	0.00	1	Fresno	Herndon, Hanford	Aug NQC	Solar
252	PG&E	LOTUS_6_LSFSR1	34335	LOTUSSFS	0.32	0.00	1	Fresno	Borden	Aug NQC	Solar
253	PG&E	LTBEAR_1_LB3SR3	365663	LILBEAR3SPV	0.55	0.00	1	Fresno	Panoche 115 kV, Wilson 115 kV	Aug NQC	Solar
254	PG&E	LTBEAR_1_LB4SR4	365673	LILBEAR4SPV	34.5	0.00	1	Fresno	Panoche 115 kV, Wilson 115 kV	Aug NQC	Solar
255	PG&E	LTBEAR_1_LB4SR5	365675	LILBEAR5SPV	34.5	0.00	1	Fresno	Panoche 115 kV, Wilson 115 kV	Aug NQC	Solar
256	PG&E	LTBERA_1_LB1SR1	365604	LILBEAR1SPV	0.55	0.00	1	Fresno	Panoche 115 kV, Wilson 115 kV	Aug NQC	Solar
257	PG&E	LUNAVL_2_LVSSR1	365740	Q1129SBDC1	34.5	0.00	1	Fresno		Aug NQC	Solar
258	PG&E	LUNAVL_2_LVSSR2	365740	Q1129SBDC1	34.5	0.00	1	Fresno		Aug NQC	Solar
259	PG&E	LUNAVL_2_LVSSR3	367628	Q1129SBDC2	34.5	0.00	1	Fresno		Aug NQC	Solar
260	PG&E	MALAGA_1_AUCTG1	34671	KRCDPCT1	13.8	0.00	1	Fresno	Herndon		Market
261	PG&E	MALAGA_1_AUCTG2	34672	KRCDPCT2	13.8	0.00	1	Fresno	Herndon		Market
262	PG&E	MCCALL_1_QF				0.00		Fresno	Herndon	Not modeled Aug NQC	QF/Selfgen
263	PG&E	MCSWAN_6_UNITS	34320	MCSWAIN	9.11	0.00	1	Fresno	Panoche 115 kV, Wilson 115 kV	Aug NQC	MUNI

Attachment A - List of physical resources accounted for in the 2027 and 2031 Local Capacity Technical Studies
Physical Res. 2027 LCR

264	PG&E	MENBIO_6_RENEW1	34339	CALRENEW	12.5	0.00	1	Fresno	Panoche 115 kV, Wilson 115 kV	Aug NQC	Net Seller
265	PG&E	MERCED_1_SOLAR1				0.00		Fresno		Not modeled Energy Only	Solar
266	PG&E	MERCED_1_SOLAR2				0.00		Fresno		Not modeled Energy Only	Solar
267	PG&E	MERCFL_6_UNIT	34322	MERCEDFL	9.11	0.00	1	Fresno	Panoche 115 kV, Wilson 115 kV	Aug NQC	Market
268	PG&E	MNDOTA_1_SOLAR1	34313	NORTHSTA	0.2	0.00	1	Fresno	Panoche 115 kV, Wilson 115 kV	Aug NQC	Solar
269	PG&E	MNDOTA_1_SOLAR2				0.00		Fresno	Panoche 115 kV, Wilson 115 kV	Not modeled Energy Only	Solar
270	PG&E	MSTANG_2_MTGBT1	34685	MUSTANGBES	0.8	0.00	2	Fresno			Battery
271	PG&E	MSTANG_2_SOLAR	34683	REMUSTANGSPV	0.36	0.00	1	Fresno		Aug NQC	Solar
272	PG&E	MSTANG_2_SOLAR3	34683	REMUSTANGSPV	0.36	0.00	1	Fresno		Aug NQC	Solar
273	PG&E	MSTANG_2_SOLAR4	34683	REMUSTANGSPV	0.36	0.00	1	Fresno		Aug NQC	Solar
274	PG&E	ONLLPP_6_UNITS	34316	ONEILPMP	9.11	0.00	1	Fresno		Aug NQC	MUNI
275	PG&E	OROLOM_1_SOLAR1	346892	OROLOMA1SPV	0.39	0.00	1	Fresno	Panoche 115 kV	Energy Only	Solar
276	PG&E	OROLOM_1_SOLAR2	34689	OROLOMA_D3	12.5	0.00	2	Fresno	Panoche 115 kV	Energy Only	Solar
277	PG&E	ORTGA_6_ME1SL1				0.00		Fresno		Not modeled Aug NQC	Solar
278	PG&E	PAIGES_6_SOLAR	34653	PAIGESLR	0.55	0.00	1	Fresno	Coalinga, Panoche 115 kV	Energy Only	Solar
279	PG&E	PINFLT_7_UNITS	38720	PINEFLAT	13.8	0.00	1	Fresno	Herndon	Aug NQC	MUNI
280	PG&E	PINFLT_7_UNITS	38720	PINEFLAT	13.8	0.00	2	Fresno	Herndon	Aug NQC	MUNI
281	PG&E	PINFLT_7_UNITS	38720	PINEFLAT	13.8	0.00	3	Fresno	Herndon	Aug NQC	MUNI
282	PG&E	PNCHPP_1_PL1X2	34328	STRWDPNC	13.8	0.00	1	Fresno	Panoche 115 kV		Market
283	PG&E	PNCHPP_1_PL1X2	34329	STRWDPNC	13.8	0.00	2	Fresno	Panoche 115 kV		Market
284	PG&E	PNOCHE_1_PL1X2	34142	WHD_PAN2	13.8	0.00	1	Fresno	Panoche 115 kV		Market
285	PG&E	PNOCHE_1_UNITA1	34186	CALPEAKP	13.8	0.00	1	Fresno	Panoche 115 kV		Market
286	PG&E	REEDLY_6_SOLAR				0.00		Fresno	Herndon, Reedley	Not modeled Energy Only	Solar
287	PG&E	S_RITA_6_SOLAR1				0.00		Fresno		Not modeled Energy Only	Solar
288	PG&E	SCARLT_2_SS2BT1	365240	Q1135BESS3	0.69	0.00	3	Fresno			Battery
289	PG&E	SCARLT_2_SS2SR1				0.00		Fresno			Solar

Attachment A - List of physical resources accounted for in the 2027 and 2031 Local Capacity Technical Studies
Physical Res. 2027 LCR

290	PG&E	SCARLT_2_SSABT1	365225	Q1135BESS1	34.5	0.00	1	Fresno			Battery
291	PG&E	SCARLT_2_SSASR1	365226	Q1135SPV1	34.5	0.00	1	Fresno		Aug NQC	Solar
292	PG&E	SCARLT_2_SSBBT1	365227	Q1135BESS2	34.5	0.00	2	Fresno			Battery
293	PG&E	SCARLT_2_SSBSR1	365230	Q1135SPV2	0.6	0.00	2	Fresno		Aug NQC	Solar
294	PG&E	SCHNDR_1_FIVPTS	34353	SCHINDLER_D	12.5	0.00	1	Fresno	Panoche 115 kV	Aug NQC	Solar
295	PG&E	SCHNDR_1_FIVPTS	34353	SCHINDLER_D	12.5	0.00	2	Fresno	Panoche 115 kV	Aug NQC	Solar
296	PG&E	SCHNDR_1_WSTSDE	34353	SCHINDLER_D	12.5	0.00	3	Fresno	Panoche 115 kV	Aug NQC	Solar
297	PG&E	SCHNDR_1_WSTSDE	34353	SCHINDLER_D	12.5	0.00	4	Fresno	Panoche 115 kV	Aug NQC	Solar
298	PG&E	SGREGY_6_SANGER	34646	SANGERCG1	13.8	0.00	1	Fresno	Herndon	Aug NQC	Market
299	PG&E	SGREGY_6_SANGER	34646	SANGERCG2	13.8	0.00	2	Fresno	Herndon	Aug NQC	Market
300	PG&E	SLATE_2_SLASR1	365694	SLATESPV1	0.65	0.00	1	Fresno		Aug NQC	Hybrid
301	PG&E	SLATE_2_SLASR2	365695	SLATEBESS1	0.66	0.00	2	Fresno		Aug NQC	Hybrid
302	PG&E	SLATE_2_SLASR3				0.00		Fresno		Not modeled Aug NQC	Hybrid
303	PG&E	SLATE_2_SLASR4	365698	SLATESPV2	0.65	0.00	3	Fresno		Aug NQC	Hybrid
304	PG&E	SLATE_2_SLASR5	365699	SLATEBESS2	0.66	0.00	4	Fresno		Aug NQC	Hybrid
305	PG&E	STOREY_2_MDRCH2				0.00		Fresno		Not modeled Aug NQC	Market
306	PG&E	STOREY_2_MDRCH3				0.00		Fresno		Not modeled Aug NQC	Market
307	PG&E	STOREY_2_MDRCH4				0.00		Fresno		Not modeled Aug NQC	Market
308	PG&E	STOREY_7_MDRCHW	34209	STOREY D	12.5	0.00	1	Fresno		Aug NQC	Net Seller
309	PG&E	STROUD_6_SOLAR	34563	STROUD_D	12.5	0.00	1	Fresno		Aug NQC	Solar
310	PG&E	STROUD_6_SOLAR	34563	STROUD_D	12.5	0.00	2	Fresno		Aug NQC	Solar
311	PG&E	STROUD_6_WWHSR1				0.00		Fresno		Not modeled Energy Only	Solar
312	PG&E	SUMWHT_6_SWSSR1	365504	SUMMERWHTSPV	0.6	0.00	1	Fresno		Aug NQC	Solar
313	PG&E	TRNQL8_2_AMASR1	365514	TRNQAMRSPV	0.55	0.00	1	Fresno		Aug NQC	Solar
314	PG&E	TRNQL8_2_AZUSR1	365517	TRNQAZLSPV	0.55	0.00	2	Fresno		Aug NQC	Solar
315	PG&E	TRNQL8_2_ROJSR1	365520	TRNQRJOSPV	0.55	0.00	3	Fresno		Aug NQC	Solar
316	PG&E	TRNQL8_2_VERSR1	365526	TRNQVRDSPV	0.55	0.00	4	Fresno		Aug NQC	Solar
317	PG&E	TRNQLT_2_RETBT1	34444	RETRQLTYBES1	0.53	0.00	1	Fresno			Battery
318	PG&E	TRNQLT_2_RETBT1	365332	RETRQLTYBES2	0.53	0.00	2	Fresno			Battery
319	PG&E	TRNQLT_2_SOLAR	34340	TRANQLTYSPV1	0.42	0.00	1	Fresno		Aug NQC	Solar
320	PG&E	TRNQLT_2_SOLAR	365330	TRANQLTYSPV2	0.42	0.00	2	Fresno		Aug NQC	Solar

Attachment A - List of physical resources accounted for in the 2027 and 2031 Local Capacity Technical Studies
Physical Res. 2027 LCR

321	PG&E	TVYVLY_6_KRSHY1				0.00		Fresno		Not modeled Aug NQC	Market
322	PG&E	ULTPFR_1_UNIT 1	34640	RIOBRVOF	12.5	0.00	1	Fresno	Herndon	Aug NQC	Market
323	PG&E	VEGA_6_SOLAR1	34314	VEGA	34.5	0.00	1	Fresno		Energy Only	Solar
324	PG&E	WAUKNA_1_SOLAR	365180	CRCRNSLRSPV	0.36	0.00	1	Fresno	Herndon, Hanford	Aug NQC	Solar
325	PG&E	WAUKNA_1_SOLAR2	34677	CORCORAN2SPV	0.41	0.00	1	Fresno	Herndon, Hanford	No NQC - Pmax	Solar
326	PG&E	WFRESN_1_SOLAR				0.00		Fresno		Not modeled Energy Only	Solar
327	PG&E	WHITNY_6_SOLAR	34673	WHTNYPTSPV	0.55	0.00	1	Fresno	Coalinga, Panoche 115 kV	Energy Only	Solar
328	PG&E	WISHON_6_UNITS	34658	WISHON	2.3	0.00	1	Fresno	Borden	Aug NQC	Market
329	PG&E	WISHON_6_UNITS	34658	WISHON	2.3	0.00	2	Fresno	Borden	Aug NQC	Market
330	PG&E	WISHON_6_UNITS	34658	WISHON	2.3	0.00	3	Fresno	Borden	Aug NQC	Market
331	PG&E	WISHON_6_UNITS	34658	WISHON	2.3	0.00	4	Fresno	Borden	Aug NQC	Market
332	PG&E	WISHON_6_UNITS	34658	WISHON	2.3	0.00	SJ	Fresno	Borden	Aug NQC	Market
333	PG&E	WOODWR_1_HYDRO				0.00		Fresno	Herndon	Not modeled Energy Only	Market
334	PG&E	ZZ_BORDEN_2_QF	34253	BORDEN D	12.5	0.00	QF	Fresno		No NQC - hist. data	Net Seller
335	PG&E	ZZ_BULLRD_7_SAGNES	34213	BULLD 12	12.5	0.00	1	Fresno	Herndon	Aug NQC	QF/Selfgen
336	PG&E	ZZ_CHWCHL_1_BIOMAS	34305	CHWCHLA2	13.8	0.00	1	Fresno	Panoche 115 kV, Wilson 115 kV	Aug NQC	Market
337	PG&E	ZZ_DINUBA_6_UNIT	34648	DINUBA E	13.8	0.00	MB	Fresno	Herndon, Reedley	Mothballed	Market
338	PG&E	ZZ_ELNIDP_6_BIOMAS	34330	ELNIDOBM	13.8	0.00	1	Fresno	Panoche 115 kV, Wilson 115 kV	Aug NQC	Market
339	PG&E	ZZ_HENRTA_6_UNITA1	365336	ELECTROLYTB1	0.69	0.00	3	Fresno		Energy Only	Battery
340	PG&E	ZZ_HENRTA_6_UNITA1	365337	ELECTROLYTB2	0.69	0.00	4	Fresno		Energy Only	Battery
341	PG&E	ZZ_INTTRB_6_UNIT	34342	INT.TURB	9.11	0.00	1	Fresno		Repowering	Market
342	PG&E	ZZ_KERKH1_7_UNIT 2	34343	KERCK1-2	6.6	0.00	MB	Fresno	Herndon, Wilson 115 kV	No NQC - hist. data	Market
343	PG&E	ZZ_MALAGA_1_ACDBX2	365709	ACIDBESS1	0.69	0.00	1	Fresno	Herndon	Energy Only	Battery
344	PG&E	ZZ_MALAGA_1_ACDBX2	365711	ACIDBESS2	0.69	0.00	1	Fresno	Herndon	Energy Only	Battery
345	PG&E	ZZ_NA	34485	FRESNOWW	12.5	0.00	RE	Fresno		No NQC - hist. data	QF/Selfgen

Attachment A - List of physical resources accounted for in the 2027 and 2031 Local Capacity Technical Studies
Physical Res. 2027 LCR

346	PG&E	ZZ_NA	34651	JACALITO	0.55	0.00	RE	Fresno	Coalinga	Energy Only	Market
347	PG&E	ZZ_WRGHTP_7_AMENGY	34207	WRIGHT D	12.5	0.00	QF	Fresno			QF/Selfgen
348	PG&E	ZZZ_New Unit	365504	SUMMERWHTSPV	0.6	2.34	1	Fresno		No NQC - est. data	Solar
349	PG&E	ZZZ_New Unit	366340	Q1378WIND	0.75	15.32	1	Fresno		No NQC - est. data	Wind
350	PG&E	ZZZ_New Unit	365746	Q1718WIND	0.75	18.38	1	Fresno		No NQC - est. data	Wind
351	PG&E	ZZZ_New Unit	365740	Q1129SBDC	34.5	138.50	1	Fresno		No NQC - est. data	Battery
352	PG&E	ZZZ_New Unit	366004	Q1391SPV	0.6	0.00	2	Fresno		Energy Only	Solar
353	PG&E	ZZZ_New Unit	365747	Q1718BESS	0.9	54.94	2	Fresno		No NQC - est. data	Battery
354	PG&E	ZZZ_New Unit	366005	Q1391BESS	0.6	184.00	2	Fresno		No NQC - est. data	Battery
355	PG&E	ZZZ_New Unit	365325	MUSTANGSPV3	0.36	3.70	3	Fresno		No NQC - est. data	Solar
356	PG&E	ZZZ_New Unit	365327	MUSTANGSPV4	0.36	4.10	4	Fresno		No NQC - est. data	Solar
357	PG&E	ZZZ_New Unit	365706	FSNOCGNBESS2	0.69	16.40	5	Fresno	Herndon	No NQC - est. data	Battery
358	PG&E	ZZZ_New Unit	92080	2080-WD	115	0.00	EW	Fresno	Herndon, Reedley	Energy Only	Solar
359	PG&E	ZZZ_New Unit	92226	2226-WD	115	0.00	EW	Fresno	Panoche 115 kV	Energy Only	Solar
360	PG&E	ZZZ_New Unit	92649	2649-WD	70	0.00	EW	Fresno		Energy Only	Solar
361	PG&E	ZZZ_New Unit	93057	3057-WD	115	0.00	EW	Fresno	Panoche 115 kV	Energy Only	Solar
362	PG&E	ZZZ_New Unit	92142	2142-WD	70	0.08	FW	Fresno		No NQC - est. data	Solar
363	PG&E	ZZZ_New Unit	92484	2484-WD	21	9.90	FW	Fresno	Coalinga	No NQC - est. data	Battery
364	PG&E	ZZZ_New Unit	342400	GLASS_D1	12.5	0.00	RE	Fresno		Energy Only	Solar
365	PG&E	ZZZ_New Unit	367633	SESWTF	4.16	0.00	RE	Fresno	Herndon	Energy Only	Solar
366	PG&E	ZZZ_New Unit	342671	TOMATEK	12	0.00	RE	Fresno	Panoche 115 kV, Wilson 115 kV	Energy Only	Hybrid
367	PG&E	ZZZ_New Unit	92007	2007-RD	70	0.00	RN	Fresno	Borden	Energy Only	Market
368	PG&E	ZZZ_New Unit	365340	LEPRINOFDLMR	21	0.00	RN	Fresno	Herndon, Hanford	Energy Only	Market
369	PG&E	ZZZ_New Unit	34603	JGBSWLT	12.5	0.00	ST	Fresno	Herndon, Hanford	Energy Only	Market
370	PG&E	BRDGVL_7_BAKER				0.00		Humboldt		Not modeled Aug NQC	Net Seller

Attachment A - List of physical resources accounted for in the 2027 and 2031 Local Capacity Technical Studies
Physical Res. 2027 LCR

371	PG&E	FTSWRD_6_TRFORK				0.00		Humboldt		Not modeled Aug NQC	Market
372	PG&E	FTSWRD_7_QFUNTS				0.00		Humboldt		Not modeled Aug NQC	QF/Selfgen
373	PG&E	HUMBPP_1_UNITS3	31180	HMBOBAYPPB	13.8	0.00	4	Humboldt			Market
374	PG&E	HUMBPP_1_UNITS3	31180	HMBOBAYPPB	13.8	0.00	5	Humboldt			Market
375	PG&E	HUMBPP_1_UNITS3	31180	HMBOBAYPPB	13.8	0.00	6	Humboldt			Market
376	PG&E	HUMBPP_1_UNITS3	31180	HMBOBAYPPB	13.8	0.00	7	Humboldt			Market
377	PG&E	HUMBPP_6_UNITS	31181	HMBOBAYPPA	13.8	0.00	1	Humboldt			Market
378	PG&E	HUMBPP_6_UNITS	31181	HMBOBAYPPA	13.8	0.00	2	Humboldt			Market
379	PG&E	HUMBPP_6_UNITS	31181	HMBOBAYPPA	13.8	0.00	3	Humboldt			Market
380	PG&E	HUMBPP_6_UNITS	31182	HMBOBAYPPC	13.8	0.00	8	Humboldt			Market
381	PG&E	HUMBPP_6_UNITS	31182	HMBOBAYPPC	13.8	0.00	9	Humboldt			Market
382	PG&E	HUMBPP_6_UNITS	31182	HMBOBAYPPC	13.8	0.00	10	Humboldt			Market
383	PG&E	KEKAWK_6_UNIT	31166	KEKAWAKACRK	4.16	0.00	1	Humboldt		Aug NQC	Net Seller
384	PG&E	PACLUM_6_UNIT	31152	HRCGENSAB	13.8	0.00	1	Humboldt		Aug NQC	Net Seller
385	PG&E	PACLUM_6_UNIT	31152	HRCGENSAB	13.8	0.00	2	Humboldt		Aug NQC	Net Seller
386	PG&E	PACLUM_6_UNIT	31153	HRCGENC	2.4	0.00	3	Humboldt		Aug NQC	Net Seller
387	PG&E	ZZ_ARCATA_6_FCPSB1	31072	ARCATA	60	0.00	1	Humboldt		Energy Only	Solar
388	PG&E	ZZ_BLULKE_6_BLUELK	31156	BLUELKPP	12.5	0.00	MB	Humboldt		Mothballed	Market
389	PG&E	ZZ_FAIRHV_6_UNIT	31150	FAIRHAVN	13.8	0.00	1	Humboldt		No NQC - hist. data	Net Seller
390	PG&E	ZZ_LAPAC_6_UNIT	31158	LP SAMOA	12.5	0.00	1	Humboldt			Market
391	PG&E	ZZZ_2399-WD	31080	HUMBOLDT	60	0.00	1	Humboldt		Energy Only	Solar
392	PG&E	ZZZ_2400-WD	31080	HUMBOLDT	60	0.00	2	Humboldt		Energy Only	Solar
393	PG&E	ZZZ_3258-WD	31072	ARCATA	60	0.00	2	Humboldt		Energy Only	Solar
394	PG&E	ZZZ_New Unit	399997	FAIRHAVEN ES	60	0.00	EW	Humboldt		Energy Only	Battery
395	PG&E	7STDRD_1_SOLAR1	35065	7STNDRD_D1	21.6	0.00	1	Kern	South Kern PP, Kern Oil	Aug NQC	Solar
396	PG&E	BDGRCK_1_UNITS	35029	BADGERCK	13.8	0.00	1	Kern	South Kern PP	Aug NQC	Net Seller
397	PG&E	BEARMT_1_UNIT	35066	PSE-BEAR	13.8	0.00	1	Kern	South Kern PP, Westpark	Aug NQC	Net Seller
398	PG&E	BKRFLD_2_SOLAR1				0.00		Kern	South Kern PP	Not modeled Aug NQC	Solar
399	PG&E	DEXZEL_1_UNIT	35024	DEXZEL	13.8	0.00	1	Kern	South Kern PP, Kern Oil	Aug NQC	Net Seller

400	PG&E	DISCOV_1_CHEVRN	35062	DISCOVRY	13.8	0.00	1	Kern	South Kern PP, Kern Oil	Aug NQC	QF/Selfgen
401	PG&E	DOUBLC_1_UNITS	35023	DOUBLE C	13.8	0.00	1	Kern	South Kern PP	Aug NQC	Net Seller
402	PG&E	DOUBLC_1_UNITS	35023	DOUBLE C	13.8	0.00	2	Kern	South Kern PP	Aug NQC	Net Seller
403	PG&E	KERNFT_1_UNITS	35026	KERNFRNT	13.8	0.00	1	Kern	South Kern PP	Aug NQC	Net Seller
404	PG&E	KERNFT_1_UNITS	35026	KERNFRNT	13.8	0.00	2	Kern	South Kern PP	Aug NQC	Net Seller
405	PG&E	LAMONT_1_SOLAR1	35019	REGULUS	0.4	0.00	1	Kern	South Kern PP, Kern PWR-Tevis	Aug NQC	Solar
406	PG&E	LAMONT_1_SOLAR2	35092	REDWOODSPV	0.6	0.00	4	Kern	South Kern PP, Kern PWR-Tevis	Aug NQC	Solar
407	PG&E	LAMONT_1_SOLAR3	35087	WOODMERESPV	0.4	0.00	1	Kern	South Kern PP, Kern PWR-Tevis	Aug NQC	Solar
408	PG&E	LAMONT_1_SOLAR4	35059	HAYWORTHSPV	0.4	0.00	1	Kern	South Kern PP, Kern PWR-Tevis	Aug NQC	Solar
409	PG&E	LAMONT_1_SOLAR5	35054	REDCRESTSPV	0.4	0.00	1	Kern	South Kern PP, Kern PWR-Tevis	Aug NQC	Solar
410	PG&E	LIVOAK_1_UNIT 1	35058	PSE-LVOK	9.1	0.00	1	Kern	South Kern PP, Kern Oil	Aug NQC	Net Seller
411	PG&E	MAGUND_1_BKISR1				0.00		Kern	South Kern PP, Kern Oil	Not modeled Aug NQC	Solar
412	PG&E	MAGUND_1_BKSSR2				0.00		Kern	South Kern PP, Kern Oil	Not modeled Aug NQC	Solar
413	PG&E	MTNPOS_1_UNIT	35036	MT POSO	13.8	0.00	1	Kern	South Kern PP, Kern Oil	Aug NQC	Net Seller
414	PG&E	OLDRIV_6_BIOGAS				0.00		Kern	South Kern PP, Kern 70 kV	Not modeled Aug NQC	Market
415	PG&E	OLDRIV_6_CESDBM				0.00		Kern	South Kern PP, Kern 70 kV	Not modeled Aug NQC	Market
416	PG&E	OLDRIV_6_LKVBM1				0.00		Kern	South Kern PP, Kern 70 kV	Not modeled Aug NQC	Market
417	PG&E	OLDRV1_6_SOLAR	35091	OLDRIVER1SPV	0.69	0.00	1	Kern	South Kern PP, Kern 70 kV	Aug NQC	Solar
418	PG&E	SIERRA_1_UNITS	35027	HISIERRA	13.8	0.00	1	Kern	South Kern PP	Aug NQC	Market
419	PG&E	SIERRA_1_UNITS	35027	HISIERRA	13.8	0.00	2	Kern	South Kern PP	Aug NQC	Market
420	PG&E	SKERN_6_SOLAR1	35089	S_KERN	0.48	0.00	1	Kern	South Kern PP, Kern 70 kV	Aug NQC	Solar
421	PG&E	SKERN_6_SOLAR2	365563	SKICSPV	0.4	0.00	1	Kern	South Kern PP, Kern 70 kV	Aug NQC	Solar
422	PG&E	VEDDER_1_SEKERN	35046	SEKR	9.11	0.00	1	Kern	South Kern PP, Kern Oil	Aug NQC	QF/Selfgen

Attachment A - List of physical resources accounted for in the 2027 and 2031 Local Capacity Technical Studies
Physical Res. 2027 LCR

423	PG&E	ZZZ_New Unit	91783	1783-WD	0.65	0.00	EW	Kern	South Kern PP, Kern PWR-Tevis	Energy Only	Solar
424	PG&E	ZZZ_New Unit	366955	2446-RD-SPV	0.65	0.00	RE	Kern	South Kern PP, Kern Oil	Energy Only	Solar
425	PG&E	ZZZ_New Unit	35068	EANDB_D1	12.5	0.00	RE	Kern	South Kern PP	Energy Only	Solar
426	PG&E	ZZZ_New Unit	348120	VEDDER_D1	12.5	0.00	RE	Kern	South Kern PP, Kern Oil	Energy Only	Solar
427	PG&E	ADLIN_1_UNITS	31435	AIDLINGYSR1	13.8	0.00	1	NCNB	Eagle Rock, Fulton		Market
428	PG&E	ADLIN_1_UNITS	31437	AIDLINGYSR2	13.8	0.00	2	NCNB	Eagle Rock, Fulton		Market
429	PG&E	BERCYN_2_BCEBT1	39185	Q1097	0.4	0.00	1	NCNB	Fulton		Battery
430	PG&E	CLOVDL_1_SOLAR				0.00		NCNB	Eagle Rock, Fulton	Not modeled Aug NQC	Solar
431	PG&E	FULTON_1_QF				0.00		NCNB	Fulton	Not modeled Aug NQC	QF/Selfgen
432	PG&E	GEYS11_7_UNIT11	31412	GEYSER11	13.8	0.00	1	NCNB	Eagle Rock, Fulton		Market
433	PG&E	GEYS12_7_UNIT12	31414	GEYSER12	13.8	0.00	1	NCNB	Fulton		Market
434	PG&E	GEYS13_7_UNIT13	31416	GEYSER13	13.8	0.00	1	NCNB			Market
435	PG&E	GEYS14_7_UNIT14	31418	GEYSER14	13.8	0.00	1	NCNB	Fulton		Market
436	PG&E	GEYS16_7_UNIT16	31420	GEYSER16	13.8	0.00	1	NCNB	Fulton		Market
437	PG&E	GEYS17_7_UNIT17	31422	GEYSER17	13.8	0.00	1	NCNB	Fulton		Market
438	PG&E	GEYS18_7_UNIT18	31424	GEYSER18	13.8	0.00	1	NCNB			Market
439	PG&E	GEYS20_7_UNIT20	31426	GEYSER20	13.8	0.00	1	NCNB			Market
440	PG&E	GYS5X6_7_UNITS	31406	GEYSR5-6	13.8	0.00	1	NCNB	Eagle Rock, Fulton		Market
441	PG&E	GYS5X6_7_UNITS	31406	GEYSR5-6	13.8	0.00	2	NCNB	Eagle Rock, Fulton		Market
442	PG&E	GYS7X8_7_UNITS	31408	GEYSER78	13.8	0.00	1	NCNB	Eagle Rock, Fulton		Market
443	PG&E	GYS7X8_7_UNITS	31408	GEYSER78	13.8	0.00	2	NCNB	Eagle Rock, Fulton		Market
444	PG&E	GYSRVL_7_WSPRNG				0.00		NCNB	Fulton	Not modeled Aug NQC	QF/Selfgen
445	PG&E	HILAND_7_YOLOWD				0.00		NCNB	Eagle Rock, Fulton	Not Modeled. Energy Only	Market
446	PG&E	IGNACO_1_QF				0.00		NCNB		Not modeled Aug NQC	QF/Selfgen
447	PG&E	INDVLY_1_UNITS	31436	INDIANVLPH	4.16	0.00	1	NCNB	Eagle Rock, Fulton	Aug NQC	Net Seller
448	PG&E	INDVLY_1_UNITS	31436	INDIANVLPH	4.16	0.00	2	NCNB	Eagle Rock, Fulton	Aug NQC	Net Seller
449	PG&E	MONTPH_7_UNITS	32700	MONTICLO	9.1	0.00	1	NCNB	Fulton	Aug NQC	Market
450	PG&E	MONTPH_7_UNITS	32700	MONTICLO	9.1	0.00	2	NCNB	Fulton	Aug NQC	Market
451	PG&E	MONTPH_7_UNITS	32700	MONTICLO	9.1	0.00	3	NCNB	Fulton	Aug NQC	Market

Attachment A - List of physical resources accounted for in the 2027 and 2031 Local Capacity Technical Studies
Physical Res. 2027 LCR

452	PG&E	NCPA_7_GP1UN1	38106	NCPA1GY1	13.8	0.00	1	NCNB		Aug NQC	MUNI
453	PG&E	NCPA_7_GP1UN2	38108	NCPA1GY2	13.8	0.00	1	NCNB		Aug NQC	MUNI
454	PG&E	NCPA_7_GP2UN3	38110	NCPA2GY1	13.8	0.00	1	NCNB	Fulton	Aug NQC	MUNI
455	PG&E	NCPA_7_GP2UN4	38112	NCPA2GY2	13.8	0.00	1	NCNB	Fulton	Aug NQC	MUNI
456	PG&E	NOVATO_6_LNDFL				0.00		NCNB		Not modeled Aug NQC	Market
457	PG&E	SANTFG_7_UNITS	31400	SANTAFESTG1	13.8	0.00	1	NCNB			Market
458	PG&E	SANTFG_7_UNITS	31401	SANTAFESTG2	13.8	0.00	2	NCNB			Market
459	PG&E	SMUDGO_7_UNIT 1	31430	SONOMAPPGEO	13.8	0.00	1	NCNB			Market
460	PG&E	SNMALF_6_UNITS	31446	SONOMA LDFL1	4.16	0.00	1	NCNB	Fulton	Aug NQC	QF/Selfgen
461	PG&E	SNMALF_6_UNITS	31446	SONOMA LDFL1	4.16	0.00	2	NCNB	Fulton	Aug NQC	QF/Selfgen
462	PG&E	SNMALF_6_UNITS	31446	SONOMA LDFL1	4.16	0.00	3	NCNB	Fulton	Aug NQC	QF/Selfgen
463	PG&E	SNMALF_6_UNITS	31446	SONOMA LDFL1	4.16	0.00	4	NCNB	Fulton	Aug NQC	QF/Selfgen
464	PG&E	SNMALF_6_UNITS	31447	SONOMA LDFL2	4.16	0.00	5	NCNB	Fulton	Aug NQC	QF/Selfgen
465	PG&E	SNMALF_6_UNITS	31447	SONOMA LDFL2	4.16	0.00	6	NCNB	Fulton	Aug NQC	QF/Selfgen
466	PG&E	SNMALF_6_UNITS	31447	SONOMA LDFL2	4.16	0.00	7	NCNB	Fulton	Aug NQC	QF/Selfgen
467	PG&E	SNMALF_6_UNITS	31447	SONOMA LDFL2	4.16	0.00	8	NCNB	Fulton	Aug NQC	QF/Selfgen
468	PG&E	SNMALF_6_UNITS	31447	SONOMA LDFL2	4.16	0.00	9	NCNB	Fulton	Aug NQC	QF/Selfgen
469	PG&E	UKIAH_7_LAKEMN	38020	CITY UKH	115	0.00	1	NCNB	Eagle Rock, Fulton	Aug NQC	MUNI
470	PG&E	UKIAH_7_LAKEMN	38020	CITY UKH	115	0.00	2	NCNB	Eagle Rock, Fulton	Aug NQC	MUNI
471	PG&E	WDFRDF_2_WFFBT1	366344	WSTFRDFLTRES	0.4	0.00	1	NCNB	Fulton		Battery
472	PG&E	ZZ_GEYS17_2_BOTRCK	31421	BOTTLERK	13.8	0.00	1	NCNB	Fulton	Energy Only and Mothballed	Market
473	PG&E	ZZ_POTTER_7_VECINO				0.00		NCNB	Eagle Rock, Fulton	Not modeled Aug NQC	QF/Selfgen
474	PG&E	ZZZ_New Unit	367338	Q1859G	12.5	53.00	1	NCNB	Eagle Rock, Fulton	No NQC - est. data	Market
475	PG&E	ZZZ_New Unit	92287	2287-WD	60	0.00	EW	NCNB		Energy Only	Solar
476	PG&E	ZZZ_New Unit	92365	2365-WD	60	0.00	EW	NCNB	Fulton	Energy Only	Solar
477	PG&E	ZZZ_New Unit	92606	2606-WD	115	0.00	EW	NCNB		Energy Only	Battery

Attachment A - List of physical resources accounted for in the 2027 and 2031 Local Capacity Technical Studies
Physical Res. 2027 LCR

478	PG&E	ALLGNY_6_HYDRO1				0.00		Sierra		Not modeled Aug NQC	Market
479	PG&E	APLHIL_1_SFKHY1				0.00		Sierra	South of Rio Oso	Not modeled Energy Only	Market
480	PG&E	BELDEN_7_UNIT 1	31784	BELDEN	13.8	0.00	1	Sierra		Aug NQC	Market
481	PG&E	BIOMAS_1_UNIT 1	32156	WOODLAND	13.8	0.00	1	Sierra		Aug NQC	Net Seller
482	PG&E	BNNIEN_7_ALTAPH				0.00		Sierra	Placer, Gold Hill-Drum, South of Rio Oso	Not modeled Aug NQC	Market
483	PG&E	BOGUE_1_UNITA1	32451	FREC	13.8	0.00	1	Sierra		Aug NQC	Market
484	PG&E	BOWMN_6_HYDRO	32480	BOWMAN	9.11	0.00	1	Sierra		Aug NQC	MUNI
485	PG&E	BUCKCK_2_HYDRO				0.00		Sierra		Not modeled Aug NQC	Market
486	PG&E	BUCKCK_7_OAKFLT				0.00		Sierra		Not modeled Aug NQC	Market
487	PG&E	BUCKCK_7_PL1X2	31820	BCKS CRK	11	0.00	1	Sierra		Aug NQC	Market
488	PG&E	BUCKCK_7_PL1X2	31820	BCKS CRK	11	0.00	2	Sierra		Aug NQC	Market
489	PG&E	CAMPFW_7_FARWST	32470	CMP.FARW	9.11	0.00	1	Sierra		Aug NQC	MUNI
490	PG&E	CHICPK_7_UNIT 1	32462	CHI.PARK	11.5	0.00	1	Sierra	Placer, Gold Hill-Drum, South of Rio Oso	Aug NQC	MUNI
491	PG&E	COLGAT_7_UNIT 1	32450	COLGATE1	13.8	0.00	1	Sierra		Aug NQC	MUNI
492	PG&E	COLGAT_7_UNIT 2	32452	COLGATE2	13.8	0.00	1	Sierra		Aug NQC	MUNI
493	PG&E	CRESTA_7_PL1X2	31812	CRESTA	11.5	0.00	1	Sierra		Aug NQC	Market
494	PG&E	CRESTA_7_PL1X2	31812	CRESTA	11.5	0.00	2	Sierra		Aug NQC	Market
495	PG&E	DAVIS_1_SOLAR1				0.00		Sierra		Not modeled Energy Only	Solar
496	PG&E	DAVIS_1_SOLAR2				0.00		Sierra		Not modeled Aug NQC	Solar
497	PG&E	DAVIS_7_MNMETH				0.00		Sierra		Not modeled Aug NQC	Market
498	PG&E	DEADCK_1_UNIT	31862	DEADWOOD	9.11	0.00	1	Sierra		Aug NQC	MUNI
499	PG&E	DEERCR_6_UNIT 1	32474	DEER CRK	2.4	0.00	1	Sierra		Aug NQC	Market
500	PG&E	DRUM_7_PL1X2	32504	DRUMPHU1U2	6.6	0.00	1	Sierra		Aug NQC	Market
501	PG&E	DRUM_7_PL1X2	32504	DRUMPHU1U2	6.6	0.00	2	Sierra		Aug NQC	Market
502	PG&E	DRUM_7_PL3X4	32506	DRUMPHU3U4	6.6	0.00	3	Sierra		Aug NQC	Market
503	PG&E	DRUM_7_PL3X4	32506	DRUMPHU3U4	6.6	0.00	4	Sierra		Aug NQC	Market
504	PG&E	DRUM_7_UNIT 5	32454	DRUM 5	13.8	0.00	1	Sierra		Aug NQC	Market
505	PG&E	DUTCH1_7_UNIT 1	32464	DTCHFLT1	11	0.00	1	Sierra	Placer, Gold Hill-Drum, South of Rio Oso	Aug NQC	Market

Attachment A - List of physical resources accounted for in the 2027 and 2031 Local Capacity Technical Studies
Physical Res. 2027 LCR

506	PG&E	DUTCH2_7_UNIT 1	32502	DTCHFLT2	6.9	0.00	1	Sierra		Aug NQC	MUNI
507	PG&E	ELDORO_7_UNIT 1	32513	ELDRADO1	21.6	0.00	1	Sierra	Gold Hill-Drum, South of Rio Oso		Market
508	PG&E	ELDORO_7_UNIT 2	32514	ELDRADO2	21.6	0.00	1	Sierra	Gold Hill-Drum, South of Rio Oso		Market
509	PG&E	FMEADO_6_HELLHL	32486	HELLHOLE	9.11	0.00	1	Sierra	South of Rio Oso	Aug NQC	MUNI
510	PG&E	FMEADO_7_UNIT	32508	FRNCH MD	4.2	0.00	1	Sierra	South of Rio Oso	Aug NQC	MUNI
511	PG&E	FORBST_7_UNIT 1	31814	FORBSTWN	11.5	0.00	1	Sierra		Aug NQC	MUNI
512	PG&E	GRIDLY_6_SOLAR	38054	GRIDLEY	60	0.00	1	Sierra	Pease	Energy Only	Solar
513	PG&E	GRIZLY_1_UNIT 1	31900	GRIZZLYG	6.9	0.00	1	Sierra		Aug NQC	MUNI
514	PG&E	GRNLF2_1_UNIT	32492	GRNLEAF2	13.8	0.00	1	Sierra	Pease	Aug NQC	QF/Selfgen
515	PG&E	HALSEY_6_UNIT	32478	HALSEY F	6.6	0.00	1	Sierra	Placer, Gold Hill-Drum, South of Rio Oso	Aug NQC	Market
516	PG&E	HAYPRS_6_HAYHD1	32488	HAYPRESSLWR	3.14	0.00	1	Sierra		Aug NQC	Market
517	PG&E	HAYPRS_6_HAYHD2	32489	HAYPRESSUPR	3.14	0.00	1	Sierra		Aug NQC	Market
518	PG&E	HIGGNS_1_COMBIE				0.00		Sierra	South of Rio Oso	Not modeled Aug NQC	Market
519	PG&E	KELYRG_6_UNIT	31834	KELLYRDG	4.16	0.00	1	Sierra		Aug NQC	MUNI
520	PG&E	LIVEOK_6_SOLAR				0.00		Sierra	Pease	Not modeled Aug NQC	Solar
521	PG&E	LODIEC_2_PL1X2	38123	LODIECCT	18	0.00	1	Sierra	South of Rio Oso		MUNI
522	PG&E	LODIEC_2_PL1X2	38124	LODIECST	18	0.00	1	Sierra	South of Rio Oso		MUNI
523	PG&E	MDFKRL_2_PROJCT	32456	MIDLFORK	13.8	0.00	1	Sierra	South of Rio Oso	Aug NQC	MUNI
524	PG&E	MDFKRL_2_PROJCT	32458	RALSTON	13.8	0.00	1	Sierra	South of Rio Oso	Aug NQC	MUNI
525	PG&E	MDFKRL_2_PROJCT	32456	MIDLFORK	13.8	0.00	2	Sierra	South of Rio Oso	Aug NQC	MUNI
526	PG&E	NAROW1_2_UNIT	32466	NARROWS1	11	0.00	1	Sierra		Aug NQC	Market
527	PG&E	NAROW2_2_UNIT	32468	NARROWSPH2	13.8	0.00	1	Sierra		Aug NQC	MUNI
528	PG&E	NWCSTL_7_UNIT 1	32460	NEWCSTLE	13.2	0.00	1	Sierra	Placer, Gold Hill-Drum, South of Rio Oso	Aug NQC	Market
529	PG&E	OROVIL_6_UNIT	31888	OROVLENRG	4.16	0.00	1	Sierra		Aug NQC	Market
530	PG&E	OXBOW_6_DRUM	32484	OXBOW F	9.11	0.00	1	Sierra		Aug NQC	MUNI
531	PG&E	PEASE_1_TBEBT1	91902	1902-WD	115	0.00	FW	Sierra	Pease		Battery
532	PG&E	PLACVL_1_CHILIB				0.00		Sierra	Gold Hill-Drum, South of Rio Oso	Not modeled Aug NQC	Market
533	PG&E	PLACVL_1_RCKCRE				0.00		Sierra	South of Rio Oso	Not modeled Aug NQC	Market

Attachment A - List of physical resources accounted for in the 2027 and 2031 Local Capacity Technical Studies
Physical Res. 2027 LCR

534	PG&E	PLSNTG_7_LNCLND				0.00		Sierra	South of Rio Oso	Not modeled Aug NQC	Market
535	PG&E	POEPH_7_UNIT 1	31790	POE 1	13.8	0.00	1	Sierra		Aug NQC	Market
536	PG&E	POEPH_7_UNIT 2	31792	POE 2	13.8	0.00	1	Sierra		Aug NQC	Market
537	PG&E	RCKCRK_7_UNIT 1	31786	ROCK CK1	13.8	0.00	1	Sierra		Aug NQC	Market
538	PG&E	RCKCRK_7_UNIT 2	31788	ROCK CK2	13.8	0.00	1	Sierra		Aug NQC	Market
539	PG&E	RIOOSO_1_QF				0.00		Sierra		Not modeled Aug NQC	QF/Selfgen
540	PG&E	ROLLIN_6_UNIT	32476	ROLLINSF	6.6	0.00	1	Sierra		Aug NQC	MUNI
541	PG&E	SLYCRK_1_UNIT 1	31832	SLY.CR.	6.6	0.00	1	Sierra		Aug NQC	MUNI
542	PG&E	SPAULD_6_UNIT 3	32472	SPAULDG	9.11	0.00	3	Sierra		Aug NQC	Market
543	PG&E	SPAULD_6_UNIT12	32472	SPAULDG	9.11	0.00	1	Sierra		Aug NQC	Market
544	PG&E	SPAULD_6_UNIT12	32472	SPAULDG	9.11	0.00	2	Sierra		Aug NQC	Market
545	PG&E	SPI LI_2_UNIT 1	32498	SPILINCF	12.5	0.00	1	Sierra	South of Rio Oso	Aug NQC	Net Seller
546	PG&E	STIGCT_2_LODI	38114	STIG CC	13.8	0.00	1	Sierra	South of Rio Oso		MUNI
547	PG&E	ULTRCK_2_UNIT	32500	RBROCKLI	12.5	0.00	1	Sierra	South of Rio Oso	Aug NQC	Market
548	PG&E	WDLEAF_7_UNIT 1	31794	WOODLEAF	13.8	0.00	1	Sierra		Aug NQC	MUNI
549	PG&E	WHEATL_6_LNDFIL				0.00		Sierra		Not modeled Aug NQC	Market
550	PG&E	WISE_1_UNIT 1	325120	WISEPH	6.6	0.00	1	Sierra	Placer, Gold Hill-Drum, South of Rio Oso	Aug NQC	Market
551	PG&E	WISE_1_UNIT 2	325120	WISEPH	6.6	0.00	1	Sierra	Placer, Gold Hill-Drum, South of Rio Oso	Aug NQC	Market
552	PG&E	YUBACT_1_SUNSWT	32494	YUBACITY	13.8	0.00	1	Sierra	Pease	Aug NQC	Net Seller
553	PG&E	YUBACT_6_UNITA1	32496	YCEC	13.8	0.00	1	Sierra	Pease		Market
554	PG&E	ZZ_NA	32162	RIV.DLTA	9.11	0.00	1	Sierra		No NQC - hist. data	QF/Selfgen
555	PG&E	ZZ_UCDAVS_1_UNIT	32166	UC DAVIS	9.11	0.30	RN	Sierra		No NQC - hist. data	QF/Selfgen
556	PG&E	BEARDS_7_UNIT 1	34074	BEARDSLY	6.9	0.00	1	Stockton	Tesla-Bellota, Stanislaus	Aug NQC	MUNI
557	PG&E	CAMCHE_1_PL1X3	33850	CAMANCHE	4.2	0.00	1	Stockton	Tesla-Bellota	Aug NQC	MUNI
558	PG&E	CAMCHE_1_PL1X3	33850	CAMANCHE	4.2	0.00	2	Stockton	Tesla-Bellota	Aug NQC	MUNI
559	PG&E	CAMCHE_1_PL1X3	33850	CAMANCHE	4.2	0.00	3	Stockton	Tesla-Bellota	Aug NQC	MUNI
560	PG&E	CENT40_1_C40SR1	365683	Q1103SPV	0.32	0.00	1	Stockton	Tesla-Bellota	Aug NQC	Solar
561	PG&E	CRWCKS_1_SOLAR1	34053	CRWCRKSLR1G	0.8	0.00	1	Stockton	Tesla-Bellota	Energy Only	Solar
562	PG&E	DONNLS_7_UNIT	34058	DONNELLS	13.8	0.00	1	Stockton	Tesla-Bellota, Stanislaus	Aug NQC	MUNI

Attachment A - List of physical resources accounted for in the 2027 and 2031 Local Capacity Technical Studies
Physical Res. 2027 LCR

563	PG&E	FROGTN_1_UTICAA				0.00		Stockton	Tesla-Bellota, Stanislaus	Not Modeled Aug NQC	Market
564	PG&E	FROGTN_1_UTICAM				0.00		Stockton	Tesla-Bellota, Stanislaus	Not Modeled Aug NQC	Market
565	PG&E	LOCKFD_1_BEARCK				0.00		Stockton	Tesla-Bellota	Not Modeled Aug NQC	Solar
566	PG&E	LOCKFD_1_KSOLAR				0.00		Stockton	Tesla-Bellota	Not Modeled Aug NQC	Solar
567	PG&E	LODI25_2_UNIT 1	38120	LODI25CT	13.8	0.00	1	Stockton	Lockeford		MUNI
568	PG&E	MANTEC_1_ML1SR1				0.00		Stockton	Tesla-Bellota	Not modeled Energy Only	Solar
569	PG&E	NORCNV_1_NCVBT1	365141	Q1109BESS	34.5	0.00	1	Stockton	Tesla-Bellota		Battery
570	PG&E	PALSEL_6_PLSBT1	366966	Q1350BESS	34.5	0.00	1	Stockton	Tesla-Bellota		Battery
571	PG&E	PALSEL_6_PLSSR1	366130	Q1350SPV1	34.5	0.00	1	Stockton	Tesla-Bellota	Aug NQC	Solar
572	PG&E	PALSEL_6_PLSSR1	366131	Q1350SPV2	34.5	0.00	1	Stockton	Tesla-Bellota	Aug NQC	Solar
573	PG&E	PEORIA_1_SOLAR				0.00		Stockton	Tesla-Bellota, Stanislaus	Not modeled Aug NQC	Solar
574	PG&E	PHOENX_1_UNIT				0.00		Stockton	Tesla-Bellota, Stanislaus	Not modeled Aug NQC	Market
575	PG&E	SCHLTE_1_PL1X3	33805	GWFTRCY1	13.8	0.00	1	Stockton	Tesla-Bellota		Market
576	PG&E	SCHLTE_1_PL1X3	33807	GWFTRCY2	13.8	0.00	1	Stockton	Tesla-Bellota		Market
577	PG&E	SCHLTE_1_PL1X3	33811	GWFTRCY3	13.8	0.00	1	Stockton	Tesla-Bellota		Market
578	PG&E	SMPRIP_1_SMPSON	33810	RIPONCOGEN	13.8	46.05	1	Stockton	Tesla-Bellota	Aug NQC	Market
579	PG&E	SNDBAR_7_UNIT 1	34060	SANDBAR	13.8	0.00	1	Stockton	Tesla-Bellota, Stanislaus	Aug NQC	MUNI
580	PG&E	SPIFBD_1_PL1X2	34055	SPISONORA	13.8	0.00	1	Stockton	Tesla-Bellota, Stanislaus	Aug NQC	Market
581	PG&E	SPRGAP_1_UNIT 1	34078	SPRNGGAPPH	6.6	0.00	1	Stockton	Tesla-Bellota, Stanislaus	Aug NQC	Market
582	PG&E	STANIS_7_UNIT 1	34062	STANISLAUSPH	13.8	0.00	1	Stockton	Tesla-Bellota, Stanislaus	Aug NQC	Market
583	PG&E	TULLCK_7_UNITS	34076	TULLOCH	6.9	0.00	1	Stockton	Tesla-Bellota	Aug NQC	MUNI
584	PG&E	TULLCK_7_UNITS	34076	TULLOCH	6.9	0.00	2	Stockton	Tesla-Bellota	Aug NQC	MUNI
585	PG&E	TULLCK_7_UNITS	34076	TULLOCH	6.9	0.00	3	Stockton	Tesla-Bellota	Aug NQC	MUNI
586	PG&E	ULTPCH_1_UCSBT1	365769	Q1116BESS	0.55	0.00	2	Stockton	Tesla-Bellota, Stanislaus	No NQC - est. data	Battery
587	PG&E	ULTPCH_1_UNIT 1	34050	CHINESESTA	12.5	0.00	1	Stockton	Tesla-Bellota, Stanislaus	Aug NQC	Market
588	PG&E	VLYHOM_7_SSJID				0.00		Stockton	Tesla-Bellota, Stanislaus	Not modeled Aug NQC	MUNI

Attachment A - List of physical resources accounted for in the 2027 and 2031 Local Capacity Technical Studies
Physical Res. 2027 LCR

589	PG&E	ZZZ_New Unit	365556	SAFEWAYB	12.5	0.00	RN	Stockton	Tesla-Bellota	Energy Only	Market
590	PG&E	ZZZ_New Unit	365558	TESLAMTR	12.5	0.00	RN	Stockton	Tesla-Bellota	Energy Only	Market
591	SCE	ACACIA_6_SOLAR	29878	ACACIA_G	0.48	0.00	1	BC/Ventura		Aug NQC	Solar
592	SCE	ALAMO_6_UNIT	25653	ALAMO SC	13.8	0.00	1	BC/Ventura		Aug NQC	MUNI
593	SCE	BGSKYN_2_AS2SR1	29773	ANT2_EXP2_G	0.63	0.00	1	BC/Ventura		Aug NQC	Solar
594	SCE	BGSKYN_2_ASPSR2	29771	ANT2_SPB_G	0.6	0.00	1	BC/Ventura		No NQC - est. data	Solar
595	SCE	BGSKYN_2_ASSR1B	29775	ANT2_EXP1B_G	0.66	0.00	1	BC/Ventura		Aug NQC	Solar
596	SCE	BGSKYN_2_ASSR3A	29774	ANT2_EXP3A_G	0.63	0.00	1	BC/Ventura		Aug NQC	Solar
597	SCE	BGSKYN_2_ASSR3B	29569	ANT2_EXP3B_G	0.63	0.00	1	BC/Ventura		Aug NQC	Solar
598	SCE	BGSKYN_2_BS3SR3	29776	ANT2_SPA_G	0.6	0.00	1	BC/Ventura		Aug NQC	Solar
599	SCE	BIGCRK_2_EXESWD	24306	B CRK1-1	7.2	0.00	1	BC/Ventura	Rector, Vestal	Aug NQC	Market
600	SCE	BIGCRK_2_EXESWD	24308	B CRK2-1	13.8	0.00	1	BC/Ventura	Rector, Vestal	Aug NQC	Market
601	SCE	BIGCRK_2_EXESWD	24311	B CRK3-1	13.8	0.00	1	BC/Ventura	Rector, Vestal	Aug NQC	Market
602	SCE	BIGCRK_2_EXESWD	24317	MAMOTH1G	13.8	0.00	1	BC/Ventura	Rector, Vestal	Aug NQC	Market
603	SCE	BIGCRK_2_EXESWD	24323	PORTAL	4.8	0.00	1	BC/Ventura	Rector, Vestal	Aug NQC	Market
604	SCE	BIGCRK_2_EXESWD	24306	B CRK1-1	7.2	0.00	2	BC/Ventura	Rector, Vestal	Aug NQC	Market
605	SCE	BIGCRK_2_EXESWD	24308	B CRK2-1	13.8	0.00	2	BC/Ventura	Rector, Vestal	Aug NQC	Market
606	SCE	BIGCRK_2_EXESWD	24311	B CRK3-1	13.8	0.00	2	BC/Ventura	Rector, Vestal	Aug NQC	Market
607	SCE	BIGCRK_2_EXESWD	24318	MAMOTH2G	13.8	0.00	2	BC/Ventura	Rector, Vestal	Aug NQC	Market
608	SCE	BIGCRK_2_EXESWD	24307	B CRK1-2	13.8	0.00	3	BC/Ventura	Rector, Vestal	Aug NQC	Market
609	SCE	BIGCRK_2_EXESWD	24309	B CRK2-2	7.2	0.00	3	BC/Ventura	Rector, Vestal	Aug NQC	Market
610	SCE	BIGCRK_2_EXESWD	24312	B CRK3-2	13.8	0.00	3	BC/Ventura	Rector, Vestal	Aug NQC	Market

Attachment A - List of physical resources accounted for in the 2027 and 2031 Local Capacity Technical Studies
Physical Res. 2027 LCR

611	SCE	BIGCRK_2_EXESWD	24307	B CRK1-2	13.8	0.00	4	BC/Ventura	Rector, Vestal	Aug NQC	Market
612	SCE	BIGCRK_2_EXESWD	24309	B CRK2-2	7.2	0.00	4	BC/Ventura	Rector, Vestal	Aug NQC	Market
613	SCE	BIGCRK_2_EXESWD	24312	B CRK3-2	13.8	0.00	4	BC/Ventura	Rector, Vestal	Aug NQC	Market
614	SCE	BIGCRK_2_EXESWD	24310	B CRK2-3	7.2	0.00	5	BC/Ventura	Rector, Vestal	Aug NQC	Market
615	SCE	BIGCRK_2_EXESWD	24313	B CRK3-3	13.8	0.00	5	BC/Ventura	Rector, Vestal	Aug NQC	Market
616	SCE	BIGCRK_2_EXESWD	24310	B CRK2-3	7.2	0.00	6	BC/Ventura	Rector, Vestal	Aug NQC	Market
617	SCE	BIGCRK_2_EXESWD	24314	B CRK 4	11.5	0.00	41	BC/Ventura	Rector, Vestal	Aug NQC	Market
618	SCE	BIGCRK_2_EXESWD	24314	B CRK 4	11.5	0.00	42	BC/Ventura	Rector, Vestal	Aug NQC	Market
619	SCE	BIGCRK_2_EXESWD	24315	B CRK 8	13.8	0.00	81	BC/Ventura	Rector, Vestal	Aug NQC	Market
620	SCE	BIGCRK_2_EXESWD	24315	B CRK 8	13.8	0.00	82	BC/Ventura	Rector, Vestal	Aug NQC	Market
621	SCE	BIGCRK_7_DAM7				0.00		BC/Ventura	Rector, Vestal	Not modeled Energy Only	Market
622	SCE	BIGCRK_7_MAMRES				0.00		BC/Ventura	Rector, Vestal	Not modeled Energy Only	Market
623	SCE	BIGSKY_2_AS2BT1	29792	ANTLP2_P6A_G	0.69	0.00	1	BC/Ventura			Battery
624	SCE	BIGSKY_2_ASLBT2	29767	ANT2_LAB_G	0.69	0.00	1	BC/Ventura			Battery
625	SCE	BIGSKY_2_BSKSR6	29736	BSKY_G_BA	0.65	0.00	1	BC/Ventura		Aug NQC	Solar
626	SCE	BIGSKY_2_BSKSR7	29742	BSKY_G_BC	0.65	0.00	1	BC/Ventura		Aug NQC	Solar
627	SCE	BIGSKY_2_BSKSR8	29739	BSKY_G_BB	0.65	0.00	1	BC/Ventura		Aug NQC	Solar
628	SCE	BIGSKY_2_SOLAR1	29724	BSKY_G_ABSR	0.42	0.00	1	BC/Ventura		Aug NQC	Solar
629	SCE	BIGSKY_2_SOLAR2	29730	BSKY_G_SOLV	0.42	0.00	1	BC/Ventura		Aug NQC	Solar
630	SCE	BIGSKY_2_SOLAR3	29727	BSKY_G_SMR	0.42	0.00	1	BC/Ventura		Aug NQC	Solar
631	SCE	BIGSKY_2_SOLAR4	29701	BSKY_G_ESWA	0.42	0.00	1	BC/Ventura		Aug NQC	Solar

Attachment A - List of physical resources accounted for in the 2027 and 2031 Local Capacity Technical Studies
Physical Res. 2027 LCR

632	SCE	BIGSKY_2_SOLAR5	29733	BSKY_G_DR12	0.44	0.00	1	BC/Ventura		Aug NQC	Solar
633	SCE	BIGSKY_2_SOLAR6	29745	BSKY_G_DSR3	0.6	0.00	1	BC/Ventura		Aug NQC	Solar
634	SCE	BIGSKY_2_SOLAR7	29733	BSKY_G_DSR12	0.44	0.00	1	BC/Ventura		Aug NQC	Solar
635	SCE	CEDUCR_2_SOLAR1	25049	DUCOR1	0.39	0.00	EQ	BC/Ventura	Vestal	Energy Only	Solar
636	SCE	CEDUCR_2_SOLAR2	25052	DUCOR2	0.39	0.00	EQ	BC/Ventura	Vestal	Energy Only	Solar
637	SCE	CEDUCR_2_SOLAR3	25055	DUCOR3	0.39	0.00	EQ	BC/Ventura	Vestal	Energy Only	Solar
638	SCE	CEDUCR_2_SOLAR4	25058	DUCOR4	0.39	0.00	EQ	BC/Ventura	Vestal	Energy Only	Solar
639	SCE	CHARMN_2_PGONG1	24340	CHARMIN	13.8	0.00	1	BC/Ventura	S.Clara, Moorpark		QF/Selfgen
640	SCE	DELSUR_6_BSOLAR	25802	DELSUR_PV_FD	12.5	0.00	EQ	BC/Ventura		Aug NQC	Solar
641	SCE	DELSUR_6_CREST				0.00		BC/Ventura		Not modeled Energy Only	Market
642	SCE	DELSUR_6_DRYFRB				0.00		BC/Ventura		Not modeled Aug NQC	Market
643	SCE	DELSUR_6_HORSR1				0.00		BC/Ventura		Not modeled Energy Only	Solar
644	SCE	DELSUR_6_SOLAR1	25803	DELSUR_BS_FD	12.5	0.00	EQ	BC/Ventura		Aug NQC	Solar
645	SCE	DELSUR_6_SOLAR4				0.00		BC/Ventura		Not modeled Energy Only	Solar
646	SCE	DELSUR_6_SOLAR5				0.00		BC/Ventura		Not modeled Energy Only	Solar
647	SCE	EASTWD_7_UNIT	24319	EASTWOOD	13.8	0.00	1	BC/Ventura	Rector, Vestal		Market
648	SCE	EDMONS_2_NSPIN	25605	EDMON1AP	14.4	0.00	1	BC/Ventura		Pumps	MUNI
649	SCE	EDMONS_2_NSPIN	25606	EDMON2AP	14.4	0.00	2	BC/Ventura		Pumps	MUNI
650	SCE	EDMONS_2_NSPIN	25607	EDMON3AP	14.4	0.00	3	BC/Ventura		Pumps	MUNI
651	SCE	EDMONS_2_NSPIN	25607	EDMON3AP	14.4	0.00	4	BC/Ventura		Pumps	MUNI
652	SCE	EDMONS_2_NSPIN	25608	EDMON4AP	14.4	0.00	5	BC/Ventura		Pumps	MUNI

Attachment A - List of physical resources accounted for in the 2027 and 2031 Local Capacity Technical Studies
Physical Res. 2027 LCR

653	SCE	EDMONS_2_NSPIN	25608	EDMON4AP	14.4	0.00	6	BC/Ventura		Pumps	MUNI
654	SCE	EDMONS_2_NSPIN	25609	EDMON5AP	14.4	0.00	7	BC/Ventura		Pumps	MUNI
655	SCE	EDMONS_2_NSPIN	25609	EDMON5AP	14.4	0.00	8	BC/Ventura		Pumps	MUNI
656	SCE	EDMONS_2_NSPIN	25610	EDMON6AP	14.4	0.00	9	BC/Ventura		Pumps	MUNI
657	SCE	EDMONS_2_NSPIN	25610	EDMON6AP	14.4	0.00	10	BC/Ventura		Pumps	MUNI
658	SCE	EDMONS_2_NSPIN	25611	EDMON7AP	14.4	0.00	11	BC/Ventura		Pumps	MUNI
659	SCE	EDMONS_2_NSPIN	25611	EDMON7AP	14.4	0.00	12	BC/Ventura		Pumps	MUNI
660	SCE	EDMONS_2_NSPIN	25612	EDMON8AP	14.4	0.00	13	BC/Ventura		Pumps	MUNI
661	SCE	EDMONS_2_NSPIN	25612	EDMON8AP	14.4	0.00	14	BC/Ventura		Pumps	MUNI
662	SCE	GLDFGR_6_SOLAR1	25079	PRIDE B G	0.64	0.00	1	BC/Ventura		Aug NQC	Solar
663	SCE	GLDFGR_6_SOLAR2	25169	PRIDE C G	0.64	0.00	1	BC/Ventura		Aug NQC	Solar
664	SCE	GLOW_6_SOLAR	29896	APPINV	0.42	0.00	1	BC/Ventura		Energy Only	Solar
665	SCE	GOLETA_2_GE2BT3	29827	WDT1454_EQ_G	0.48	0.00	1	BC/Ventura	S.Clara, Moorpark, Goleta		Battery
666	SCE	GOLETA_2_VALBT1	25726	VALLECITO	0.51	0.00	1	BC/Ventura	S.Clara, Moorpark, Goleta		Battery
667	SCE	GOLETA_6_ELLWOD	29004	ELLWOOD	13.8	0.00	1	BC/Ventura	S.Clara, Moorpark, Goleta		Market
668	SCE	GOLETA_6_EXGEN	24362	EXGEN2	13.8	0.00	G1	BC/Ventura	S.Clara, Moorpark, Goleta	Aug NQC - Currently out of service	QF/Selfgen
669	SCE	GOLETA_6_EXGEN	24326	EXGEN1	13.8	0.00	S1	BC/Ventura	S.Clara, Moorpark, Goleta	Aug NQC - Currently out of service	QF/Selfgen
670	SCE	LEBECS_2_UNITS	29051	PSTRIAG1	18	0.00	G1	BC/Ventura		Aug NQC	Market
671	SCE	LEBECS_2_UNITS	29052	PSTRIAG2	18	0.00	G2	BC/Ventura		Aug NQC	Market
672	SCE	LEBECS_2_UNITS	29054	PSTRIAG3	18	0.00	G3	BC/Ventura		Aug NQC	Market

Attachment A - List of physical resources accounted for in the 2027 and 2031 Local Capacity Technical Studies
Physical Res. 2027 LCR

673	SCE	LEBECS_2_UNITS	29053	PSTRIAS1	18	0.00	S1	BC/Ventura		Aug NQC	Market
674	SCE	LEBECS_2_UNITS	29055	PSTRIAS2	18	0.00	S2	BC/Ventura		Aug NQC	Market
675	SCE	LITLRK_6_GBCSR1				0.00		BC/Ventura		Not modeled Aug NQC	Solar
676	SCE	LITLRK_6_SEPV01				0.00		BC/Ventura		Not moleded Energy Only	Market
677	SCE	LITLRK_6_SOLAR1	25840	LITLRCK FD	12.5	0.00	EQ	BC/Ventura		Aug NQC	Solar
678	SCE	LITLRK_6_SOLAR2	25840	LITLRCK FD	12.5	0.00	EQ	BC/Ventura		Aug NQC	Solar
679	SCE	LITLRK_6_SOLAR3	25840	LITLRCK FD	12.5	0.00	EQ	BC/Ventura		Aug NQC	Solar
680	SCE	LITLRK_6_SOLAR4	25840	LITLRCK FD	12.5	0.00	EQ	BC/Ventura		Aug NQC	Solar
681	SCE	LNCSTR_6_CREST				0.00		BC/Ventura		Not modeled Energy Only	Market
682	SCE	LNCSTR_6_SOLAR2	25796	LANCSTR FD1	12.5	0.00	EQ	BC/Ventura		Aug NQC	Solar
683	SCE	MNDALY_6_MCGRTH	29306	MCGPKGEN	13.8	0.00	1	BC/Ventura	S.Clara, Moorpark		Market
684	SCE	MOORPK_2_ACOBT1				0.00		BC/Ventura	Moorpark	Not modeled	Battery
685	SCE	MOORPK_2_CALABS	25081	WDT251	13.8	0.00	EQ	BC/Ventura	Moorpark	Aug NQC	Market
686	SCE	MOORPK_6_QF	240100	MOORARK EQFD	16	0.00	B	BC/Ventura	Moorpark	Aug NQC	Market
687	SCE	MOORPK_6_QF	240100	MOORARK EQFD	16	0.00	HY	BC/Ventura	Moorpark	Aug NQC	Market
688	SCE	MOORPK_6_QF	240100	MOORARK EQFD	16	0.00	PV	BC/Ventura	Moorpark	Aug NQC	Market
689	SCE	MOORPK_6_QF	240100	MOORARK EQFD	16	0.00	T	BC/Ventura	Moorpark	Aug NQC	Market
690	SCE	NEENCH_6_SOLAR	29900	ALPINE_G	0.48	0.00	1	BC/Ventura		Aug NQC	Solar
691	SCE	NOAKS_2_PESBT1	240433	WDT1649_G	0.39	0.00	1	BC/Ventura			Battery
692	SCE	OASIS_6_AR4SR3				0.00		BC/Ventura		Not modeled Energy Only	Solar
693	SCE	OASIS_6_GBDSR4				0.00		BC/Ventura		Not modeled Aug NQC	Solar

Attachment A - List of physical resources accounted for in the 2027 and 2031 Local Capacity Technical Studies
Physical Res. 2027 LCR

694	SCE	OASIS_6_SOLAR1	25095	SOLARISG2	0.2	0.00	2	BC/Ventura		Energy Only	Solar
695	SCE	OASIS_6_SOLAR2	25075	SOLARISG	0.2	0.00	1	BC/Ventura		Aug NQC	Solar
696	SCE	OASIS_6_SOLAR3				0.00		BC/Ventura		Not modeled Energy Only	Solar
697	SCE	OMAR_2_UNIT 1	24102	OMAR 1G	13.8	0.00	1	BC/Ventura			Net Seller
698	SCE	OMAR_2_UNIT 2	24103	OMAR 2G	13.8	0.00	2	BC/Ventura			Net Seller
699	SCE	OMAR_2_UNIT 3	24104	OMAR 3G	13.8	0.00	3	BC/Ventura			Net Seller
700	SCE	OMAR_2_UNIT 4	24105	OMAR 4G	13.8	0.00	4	BC/Ventura			Net Seller
701	SCE	ORMOND_7_UNIT 1	24107	ORMOND1G	26	0.00	R1	BC/Ventura	Moorpark	Strategic Reserve	Market
702	SCE	ORMOND_7_UNIT 2	24108	ORMOND2G	26	0.00	2	BC/Ventura	Moorpark	Strategic Reserve	Market
703	SCE	OSO_6_NSPIN	25614	OSO A P	13.2	0.00	1	BC/Ventura		Pumps	MUNI
704	SCE	OSO_6_NSPIN	25614	OSO A P	13.2	0.00	2	BC/Ventura		Pumps	MUNI
705	SCE	OSO_6_NSPIN	25614	OSO A P	13.2	0.00	3	BC/Ventura		Pumps	MUNI
706	SCE	OSO_6_NSPIN	25614	OSO A P	13.2	0.00	4	BC/Ventura		Pumps	MUNI
707	SCE	OSO_6_NSPIN	25615	OSO B P	13.2	0.00	5	BC/Ventura		Pumps	MUNI
708	SCE	OSO_6_NSPIN	25615	OSO B P	13.2	0.00	6	BC/Ventura		Pumps	MUNI
709	SCE	OSO_6_NSPIN	25615	OSO B P	13.2	0.00	7	BC/Ventura		Pumps	MUNI
710	SCE	OSO_6_NSPIN	25615	OSO B P	13.2	0.00	8	BC/Ventura		Pumps	MUNI
711	SCE	PIUTE_6_GNBSR1	25840	LITLRCK FD	12.5	0.00	EQ	BC/Ventura		Aug NQC	Solar
712	SCE	PLAINV_6_BSOLAR	29917	SSOLAR_GRWKS	0.8	0.00	1	BC/Ventura		Energy Only	Solar
713	SCE	PLAINV_6_DSOLAR	29914	WADR_PV	0.42	0.00	1	BC/Ventura		Aug NQC	Solar
714	SCE	PLAINV_6_NLRSR1	29921	NLR_INVTR	0.42	0.00	1	BC/Ventura		Energy Only	Solar

Attachment A - List of physical resources accounted for in the 2027 and 2031 Local Capacity Technical Studies
Physical Res. 2027 LCR

715	SCE	PLAINV_6_SOLAR3	25089	CNTRL ANT G	0.42	0.00	1	BC/Ventura		Energy Only	Solar
716	SCE	PLAINV_6_SOLARC	25086	SIRA SOLAR G	0.8	0.00	1	BC/Ventura		Energy Only	Solar
717	SCE	PMDLET_6_SOLAR1	29926	SEPV_PE_G	0.8	0.00	1	BC/Ventura		AugNQC	Solar
718	SCE	POLRIS_2_ASEBT1	29565	ANTLP2_P10_G2	0.69	0.00	2	BC/Ventura		Aug NQC	Battery
719	SCE	POLRIS_2_ASESR1	29782	ANTLP2_P10G1	0.63	0.00	1	BC/Ventura		Aug NQC	Solar
720	SCE	POLRIS_2_ASRBT1	29563	ANTLP2_P9_G2	0.69	0.00	1	BC/Ventura		Aug NQC	Battery
721	SCE	POLRIS_2_ASRSR1	29561	ANTLP2_P9_G1	0.63	0.00	1	BC/Ventura		Aug NQC	Solar
722	SCE	RECTOR_2_CREST				0.00		BC/Ventura	Rector, Vestal	Not modeled Energy Only	Market
723	SCE	RECTOR_2_IVANPV				0.00		BC/Ventura	Rector, Vestal	Not modeled Energy Only	Solar
724	SCE	RECTOR_2_KAWEAH	25755	KAWEAH1G	2.4	0.00	1	BC/Ventura	Rector, Vestal	Aug NQC	Market
725	SCE	RECTOR_2_KAWEAH	25756	KAWEAH3G	2.4	0.00	1	BC/Ventura	Rector, Vestal	Aug NQC	Market
726	SCE	RECTOR_2_KAWEAH	25754	KAWEAH2G	2.4	0.00	2	BC/Ventura	Rector, Vestal	Aug NQC	Market
727	SCE	RECTOR_2_KAWH 1	24370	KAWGEN	13.8	0.00	1	BC/Ventura	Rector, Vestal	Aug NQC	Market
728	SCE	RECTOR_2_QF				0.00		BC/Ventura	Rector, Vestal	Aug NQC	Net Seller
729	SCE	RECTOR_2_TFDBM1				0.00		BC/Ventura	Rector, Vestal	Not modeled Energy Only	Market
730	SCE	RECTOR_2_VISSR1				0.00		BC/Ventura	Rector, Vestal	Not modeled Energy Only	Solar
731	SCE	RECTOR_7_TULARE				0.00		BC/Ventura	Rector, Vestal	Not modeled Aug NQC	Market
732	SCE	REDMAN_2_SOLAR				0.00		BC/Ventura		Not modeled Aug NQC	Solar
733	SCE	REDMAN_6_AVSSR1				0.00		BC/Ventura		Not modeled Aug NQC	Solar
734	SCE	REXFRD_2_RSFBX2				0.00		BC/Ventura		Not modeled	Battery
735	SCE	REXFRD_2_RSFSX2				0.00		BC/Ventura		Not modeled	Solar

736	SCE	ROSMND_6_SOLAR				0.00		BC/Ventura		Not modeled Aug NQC	Solar
737	SCE	RSMSLR_6_SOLAR1	29884	DAWNGEN	0.8	0.00	EQ	BC/Ventura		Aug NQC	Solar
738	SCE	RSMSLR_6_SOLAR2	29888	TWILGHTG	0.8	0.00	EQ	BC/Ventura		Aug NQC	Solar
739	SCE	SAUGUS_2_SPESBT1	240418	WDT1532_G	0.48	0.00	1	BC/Ventura			Battery
740	SCE	SAUGUS_6_CREST				0.00		BC/Ventura		Not modeled Energy Only	Market
741	SCE	SAUGUS_6_MWDFTH	25721	FOOTHILL	66	0.00	EQ	BC/Ventura		Aug NQC	MUNI
742	SCE	SAUGUS_6_QF				0.00		BC/Ventura		Not modeled Aug NQC	QF/Selfgen
743	SCE	SAUGUS_7_CHIQCN				0.00		BC/Ventura		Not modeled Aug NQC	Market
744	SCE	SHUTLE_6_RUISR1	25800	ANTELOPE EQFD	12.5	0.00	P1	BC/Ventura		Energy Only	Solar
745	SCE	SNCLRA_2_BWEBT1				0.00		BC/Ventura	S.Clara, Moorpark	Not modeled	Battery
746	SCE	SNCLRA_2_HOWLNG				0.00		BC/Ventura	S.Clara, Moorpark	Not modeled Aug NQC	Market
747	SCE	SNCLRA_2_SILBT1	25899	WDT1520_G	0.48	0.00	EQ	BC/Ventura	S.Clara, Moorpark		Battery
748	SCE	SNCLRA_2_SPRHYD	240104	S.CLARA EQFD	16	0.00	T	BC/Ventura	S.Clara, Moorpark	Aug NQC	Market
749	SCE	SNCLRA_2_UNIT	29952	CAMGEN	13.8	0.00	D1	BC/Ventura	S.Clara, Moorpark		Market
750	SCE	SNCLRA_2_UNIT1	24159	WILLAMET	3.8	0.00	D1	BC/Ventura	S.Clara, Moorpark	Aug NQC	Market
751	SCE	SNCLRA_2_VESBT1	29824	SATICOY_BESS	0.51	0.00	1	BC/Ventura	S.Clara, Moorpark		Battery
752	SCE	SNCLRA_6_OXGEN	24110	OXGEN	13.8	0.00	D1	BC/Ventura	S.Clara, Moorpark		QF/Selfgen
753	SCE	SNCLRA_6_PROCGN	24119	PROCGEN	13.8	0.00	D1	BC/Ventura	S.Clara, Moorpark	Aug NQC	QF/Selfgen
754	SCE	SNCLRA_6_QF	240104	S.CLARA EQFD	16	0.00	PV	BC/Ventura	S.Clara, Moorpark	Aug NQC	QF/Selfgen
755	SCE	SPRGVL_2_CREST				0.00		BC/Ventura	Rector, Vestal	Not modeled Energy Only	Market
756	SCE	SPRGVL_2_EXETPV				0.00		BC/Ventura	Rector, Vestal	Not modeled Energy Only	Market

Attachment A - List of physical resources accounted for in the 2027 and 2031 Local Capacity Technical Studies
Physical Res. 2027 LCR

757	SCE	SPRGVL_2_LINDPV				0.00		BC/Ventura	Rector, Vestal	Not modeled Energy Only	Market
758	SCE	SPRGVL_2_PORTPV				0.00		BC/Ventura	Rector, Vestal	Not modeled Energy Only	Market
759	SCE	SPRGVL_2_SUCCES				0.00		BC/Ventura	Rector, Vestal	Not modeled	Market
760	SCE	SPRGVL_2_TULESC	25715	TULE	2.4	0.00	1	BC/Ventura	Rector, Vestal	Aug NQC	Market
761	SCE	SUNSHN_2_LNDFL	29954	SUNSHINE	13.7	0.00	1	BC/Ventura		Aug NQC	Market
762	SCE	SUNSHN_2_LNDFL	29954	SUNSHINE	13.7	0.00	2	BC/Ventura		Aug NQC	Market
763	SCE	SUNSHN_2_LNDFL	29954	SUNSHINE	13.7	0.00	3	BC/Ventura		Aug NQC	Market
764	SCE	SUNSHN_2_LNDFL	29954	SUNSHINE	13.7	0.00	4	BC/Ventura		Aug NQC	Market
765	SCE	SUNSHN_2_LNDFL	29954	SUNSHINE	13.7	0.00	5	BC/Ventura		Aug NQC	Market
766	SCE	SYCAMR_2_UNIT 1	24143	SYCCYN1G	13.8	0.00	1	BC/Ventura		Aug NQC	Net Seller
767	SCE	SYCAMR_2_UNIT 2	24144	SYCCYN2G	13.8	0.00	2	BC/Ventura		Aug NQC	Net Seller
768	SCE	SYCAMR_2_UNIT 3	24145	SYCCYN3G	13.8	0.00	3	BC/Ventura		Aug NQC	Net Seller
769	SCE	SYCAMR_2_UNIT 4	24146	SYCCYN4G	13.8	0.00	4	BC/Ventura		Aug NQC	Net Seller
770	SCE	TENGEN_2_PL1X2	24148	TENNGEN1	13.8	0.00	D1	BC/Ventura		Aug NQC	Net Seller
771	SCE	TENGEN_2_PL1X2	24149	TENNGEN2	13.8	0.00	D2	BC/Ventura		Aug NQC	Net Seller
772	SCE	TULARE_2_TULBM1				0.00		BC/Ventura		Not modeled Energy Only	Market
773	SCE	VESTAL_2_BTNBT1	240406	WDT1639-ES	0.69	0.00	1	BC/Ventura	Vestal		Battery
774	SCE	VESTAL_2_KERN	24372	KERNRVR 3-1	11	0.00	1	BC/Ventura	Vestal	Aug NQC	QF/Selfgen
775	SCE	VESTAL_2_KERN	24373	KERNRVR 3-2	11	0.00	2	BC/Ventura	Vestal	Aug NQC	QF/Selfgen
776	SCE	VESTAL_2_RTS042	25874	VESTAL EQFC	12,47	0.00	PV	BC/Ventura	Vestal	Energy Only	Market
777	SCE	VESTAL_2_SOLAR1	25064	TULRESLR_1G	0.39	0.00	1	BC/Ventura	Vestal	Aug NQC	Solar

Attachment A - List of physical resources accounted for in the 2027 and 2031 Local Capacity Technical Studies
Physical Res. 2027 LCR

778	SCE	VESTAL_2_SOLAR2	25065	TULRESLR_2G	0.39	0.00	1	BC/Ventura	Vestal	Aug NQC	Solar
779	SCE	VESTAL_2_TS5SR1	25069	WDT1490_PV	0.36	0.00	1	BC/Ventura	Vestal	Aug NQC	Solar
780	SCE	VESTAL_2_UNIT1	25874	VESTAL EQFC	12.5	0.00	SY	BC/Ventura	Vestal	Aug NQC	Market
781	SCE	VESTAL_2_WELLHD	24116	WELLGEN	13.8	0.00	1	BC/Ventura	Vestal		Market
782	SCE	VESTAL_6_QF	29008	LAKEGEN	13.8	0.00	1	BC/Ventura	Vestal	Aug NQC	Market
783	SCE	VESTAL_6_QF	25874	VESTAL EQFC	12,47	0.00	HY	BC/Ventura	Vestal	Aug NQC	Market
784	SCE	WARNE_2_UNIT	25651	WARNE1	13.8	0.00	1	BC/Ventura		Aug NQC	MUNI
785	SCE	WARNE_2_UNIT	25652	WARNE2	13.8	0.00	2	BC/Ventura		Aug NQC	MUNI
786	SCE	ZZ_GOLETA_2_QF	240115	GOLETA EQFD	16	0.00	SY	BC/Ventura	S.Clara, Moorpark, Goleta	No NQC - Pmax	Market
787	SCE	ZZ_GOLETA_6_TR2BM2	240115	GOLETA EQFD	16	0.00	HY	BC/Ventura	S.Clara, Moorpark, Goleta	No NQC - est. data	Market
788	SCE	ZZ_OASIS_6_AR4SR1	25798	OASIS FD	12.5	0.00	P3	BC/Ventura		Energy Only	Solar
789	SCE	ZZ_OASIS_6_AR4SR2	25798	OASIS FD	12.5	0.00	P4	BC/Ventura		Energy Only	Solar
790	SCE	ZZ_OASIS_6_AR8SR3	25798	OASIS FD	12.5	0.00	P2	BC/Ventura		Energy Only	Solar
791	SCE	ZZ_OASIS_6_MA4SR1	25798	OASIS FD	12.5	0.00	EQ	BC/Ventura		Energy Only	Solar
792	SCE	ZZ_OASIS_6_MA4SR1	25798	OASIS FD	12.5	0.00	P1	BC/Ventura		Energy Only	Solar
793	SCE	ZZ_RDWAY_1_WA2SR3	25800	ANTELOPE EQFD	12.5	0.00	P5	BC/Ventura		Energy Only	Solar
794	SCE	ZZ_RDWAY_1_WAISR2	25800	ANTELOPE EQFD	12.5	0.00	P4	BC/Ventura		Energy Only	Solar
795	SCE	ZZ_RECTOR_2_SFVSR1	25855	RECTOR EQFD	12.5	0.00	P5	BC/Ventura	Rector, Vestal	Energy Only	Solar
796	SCE	ZZ_RECTOR_2_SFVSR2	25855	RECTOR EQFD	12.5	0.00	P6	BC/Ventura	Rector, Vestal	Energy Only	Solar
797	SCE	ZZ_RECTOR_2_SFVSR3	25855	RECTOR EQFD	12.5	0.00	P7	BC/Ventura	Rector, Vestal	Energy Only	Solar
798	SCE	ZZ_RECTOR_2_SH1SR1	25855	RECTOR EQFD	12.5	0.00	P3	BC/Ventura	Rector, Vestal	Energy Only	Solar

Attachment A - List of physical resources accounted for in the 2027 and 2031 Local Capacity Technical Studies
Physical Res. 2027 LCR

799	SCE	ZZ_RECTOR_2_SH2SR2	25855	RECTOR EQFD	12.5	0.00	P4	BC/Ventura	Rector, Vestal	Energy Only	Solar
800	SCE	ZZ_RECTOR_2_STUSR1	25855	RECTOR EQFD	12.5	0.00	P1	BC/Ventura	Rector, Vestal	Energy Only	Solar
801	SCE	ZZ_RECTOR_2_STUSR2	25855	RECTOR EQFD	12.5	0.00	P2	BC/Ventura	Rector, Vestal	Energy Only	Solar
802	SCE	ZZ_SHUTLE_6_CREST	25800	ANTELOPE EQFD	12.5	0.00	EQ	BC/Ventura		Energy Only	Market
803	SCE	ZZ_SHUTLE_6_RUISR2	25800	ANTELOPE EQFD	12.5	0.00	P2	BC/Ventura		Energy Only	Solar
804	SCE	ZZ_SHUTLE_6_RUISR3	25800	ANTELOPE EQFD	12.5	0.00	P3	BC/Ventura		Energy Only	Solar
805	SCE	ZZ_TULARE_2_TFCBM1	25855	RECTOR EQFD	12.5	0.00	PV	BC/Ventura	Rector, Vestal	Energy Only	Solar
806	SCE	ZZZ_New Unit	240011	ANODE_G1	34.5	0.00	1	BC/Ventura	Rector, Vestal	Waiting TPD allocation	Battery
807	SCE	ZZZ_New Unit	240102	NEENACH EQFD	12.5	0.00	1	BC/Ventura		Energy Only	Solar
808	SCE	ZZZ_New Unit	240461	WDT1580_PV	0.55	0.00	1	BC/Ventura	Rector, Vestal	No NQC - est. data	Solar
809	SCE	ZZZ_New Unit	240525	NST88338_G	0.6	2.48	1	BC/Ventura		No NQC - est. data	Solar
810	SCE	ZZZ_New Unit	241364	WDT1380_G	0.6	2.60	1	BC/Ventura		No NQC - est. data	Solar
811	SCE	ZZZ_New Unit	25795	WDT1539_G	0.8	10.00	1	BC/Ventura	S.Clara, Moorpark, Goleta	No NQC - Pmax	Battery
812	SCE	ZZZ_New Unit	240336	DAWN_BESS	0.63	12.50	1	BC/Ventura		No NQC - est. data	Battery
813	SCE	ZZZ_New Unit	240338	TWILIGHTL_BS	0.63	12.50	1	BC/Ventura		No NQC - est. data	Battery
814	SCE	ZZZ_New Unit	29345	TOT833_PV	0.55	15.00	1	BC/Ventura		No NQC - est. data	Solar
815	SCE	ZZZ_New Unit	240695	WDT1701_G	0.69	15.50	1	BC/Ventura	S.Clara, Moorpark	No NQC - est. data	Battery
816	SCE	ZZZ_New Unit	25965	TOT896_G2PV	0.55	18.76	1	BC/Ventura	Vestal	No NQC - est. data	Solar
817	SCE	ZZZ_New Unit	25959	TOT896_G1PV	0.55	19.01	1	BC/Ventura	Vestal	No NQC - est. data	Solar
818	SCE	ZZZ_New Unit	29566	ANTLP2_P1BG2	0.69	25.00	1	BC/Ventura		No NQC - est. data	Battery
819	SCE	ZZZ_New Unit	240463	WDT1580_ES	0.6	40.00	1	BC/Ventura	Rector, Vestal	No NQC - est. data	Battery

Attachment A - List of physical resources accounted for in the 2027 and 2031 Local Capacity Technical Studies
Physical Res. 2027 LCR

820	SCE	ZZZ_New Unit	29836	WDT1384_G	0.63	50.00	1	BC/Ventura	Vestal	No NQC - est. data	Hybrid
821	SCE	ZZZ_New Unit	240409	WDT1650_G	0.48	80.00	1	BC/Ventura	Rector, Vestal	No NQC - est. data	Battery
822	SCE	ZZZ_New Unit	29342	TOT833_BS	0.55	82.50	1	BC/Ventura		No NQC - Pmax	Battery
823	SCE	ZZZ_New Unit	25961	TOT896_G1ST	0.55	109.50	1	BC/Ventura	Vestal	No NQC - Pmax	Battery
824	SCE	ZZZ_New Unit	25967	TOT896_G2ST	0.55	109.50	1	BC/Ventura	Vestal	No NQC - Pmax	Battery
825	SCE	ZZZ_New Unit	241343	TOT1089_G1	0.66	250.00	1	BC/Ventura	Moorpark	No NQC - est. data	Battery
826	SCE	ZZZ_New Unit	241344	TOT1089_G2	0.66	250.00	1	BC/Ventura	Moorpark	No NQC - est. data	Battery
827	SCE	ZZZ_New Unit	240014	ANODE_G2	34.5	0.00	2	BC/Ventura	Rector, Vestal	Waiting TPD allocation	Battery
828	SCE	ZZZ_New Unit	240425	WDT1710_G	16	15.00	BS	BC/Ventura		No NQC - est. data	Battery
829	SCE	ZZZ_New Unit	25867	SPRNGVL	12.5	0.00	EN	BC/Ventura	Rector, Vestal	No NQC - est. data	Market
830	SCE	ZZZ_New Unit	240115	GOLETA EQFD	16	0.20	FC	BC/Ventura	S.Clara, Moorpark, Goleta	No NQC - est. data	Market
831	SCE	ZZZ_New Unit	25865	SUAGUS EQFD	12.5	1.00	HY	BC/Ventura		No NQC - est. data	Market
832	SCE	ZZZ_New Unit	25867	SPRNGVL	12.5	0.00	P1	BC/Ventura	Rector, Vestal	No NQC - est. data	Market
833	SCE	ZZZ_New Unit	25867	SPRNGVL	12.5	0.00	P2	BC/Ventura	Rector, Vestal	No NQC - est. data	Market
834	SCE	ZZZ_New Unit	25867	SPRNGVL	12.5	0.00	PV	BC/Ventura	Rector, Vestal	Energy Only	Solar
835	SCE	ZZZ_New Unit	25865	SUAGUS EQFD	12.5	0.00	PV	BC/Ventura		Energy Only	Solar
836	SCE	ZZZ_New Unit	240110	GFID8045	16	0.00	SC	BC/Ventura	S.Clara, Moorpark	Energy Only	Market
837	SCE	ZZZ_New Unit	25865	SUAGUS EQFD	12.5	19.00	T	BC/Ventura		No NQC - est. data	Market
838	SCE	ALAMIT_2_AESBT2	25524	ALMITOS B2_G	0.75	0.00	1	LA Basin	Western		Battery
839	SCE	ALAMIT_2_PL1X3	24575	ALMT CTG1	18	0.00	G1	LA Basin	Western		Market
840	SCE	ALAMIT_2_PL1X3	24576	ALMT CTG2	18	0.00	G2	LA Basin	Western		Market
841	SCE	ALAMIT_2_PL1X3	24577	ALMT STG	18	0.00	S1	LA Basin	Western		Market
842	SCE	ALAMIT_7_ES1	25523	ALMITOS B1_G	0.65	0.00	1	LA Basin	Western		Battery

Attachment A - List of physical resources accounted for in the 2027 and 2031 Local Capacity Technical Studies
Physical Res. 2027 LCR

843	SCE	ALAMIT_7_UNIT 3	24003	ALAMT3 G	18	0.00	RH	LA Basin	Western	Strategic Reserve	Market
844	SCE	ALAMIT_7_UNIT 3	24003	ALAMT3 G	18	0.00	RL	LA Basin	Western	Strategic Reserve	Market
845	SCE	ALAMIT_7_UNIT 4	24004	ALAMT4 G	18	0.00	RH	LA Basin	Western	Strategic Reserve	Market
846	SCE	ALAMIT_7_UNIT 4	24004	ALAMT4 G	18	0.00	RL	LA Basin	Western	Strategic Reserve	Market
847	SCE	ALAMIT_7_UNIT 5	24005	ALAMT5 G	20	0.00	RH	LA Basin	Western	Strategic Reserve	Market
848	SCE	ALAMIT_7_UNIT 5	24005	ALAMT5 G	20	0.00	RL	LA Basin	Western	Strategic Reserve	Market
849	SCE	ALTWD_2_AT3WD3	29077	ALTWNDGEN2	0.6	0.00	1	LA Basin	Eastern, Valley-Devers	Aug NQC	Wind
850	SCE	ALTWD_2_COAWD1	29075	COCHELA_1_2G	0.65	0.00	1	LA Basin	Eastern, Valley-Devers	Aug NQC	Wind
851	SCE	ANAHM_2_CANYN1	25211	CanyonGT 1	13.8	0.00	1	LA Basin	Western		MUNI
852	SCE	ANAHM_2_CANYN2	25212	CanyonGT 2	13.8	0.00	2	LA Basin	Western		MUNI
853	SCE	ANAHM_2_CANYN3	25213	CanyonGT 3	13.8	0.00	3	LA Basin	Western		MUNI
854	SCE	ANAHM_2_CANYN4	25214	CanyonGT 4	13.8	0.00	4	LA Basin	Western		MUNI
855	SCE	ARCOGN_2_UNITS	24011	ARCO 1G	13.8	0.00	1	LA Basin	Western	Aug NQC	Net Seller
856	SCE	ARCOGN_2_UNITS	24012	ARCO 2G	13.8	0.00	2	LA Basin	Western	Aug NQC	Net Seller
857	SCE	ARCOGN_2_UNITS	24013	ARCO 3G	13.8	0.00	3	LA Basin	Western	Aug NQC	Net Seller
858	SCE	ARCOGN_2_UNITS	24014	ARCO 4G	13.8	0.00	4	LA Basin	Western	Aug NQC	Net Seller
859	SCE	ARCOGN_2_UNITS	24163	ARCO 5G	13.8	0.00	5	LA Basin	Western	Aug NQC	Net Seller
860	SCE	ARCOGN_2_UNITS	24164	ARCO 6G	13.8	0.00	6	LA Basin	Western	Aug NQC	Net Seller
861	SCE	BARRE_2_ALASB1				0.00		LA Basin	Western	Not modeled	Hybrid
862	SCE	BARRE_2_QF				0.00		LA Basin	Western	Not modeled	QF/Selfgen
863	SCE	BARRE_2_SBBBT1	240541	WDT1644_BESS	0.55	0.00	1	LA Basin	Western		Battery
864	SCE	BARRE_2_SBBSR1	240542	WDT1644_PV	0.55	0.00	1	LA Basin	Western	Energy Only	Solar
865	SCE	BARRE_6_PEAKER	29309	BARPKGEN	13.8	0.00	1	LA Basin	Western		Market
866	SCE	BLAST_1_WIND	29049	BLAST_G	0.6	0.00	1	LA Basin	Eastern, Valley-Devers	Aug NQC	Wind
867	SCE	BUCKWD_1_NPALM1	240150	DEVERS FC	12.5	0.00	PV	LA Basin	Eastern, Valley-Devers	Aug NQC	Wind
868	SCE	BUCKWD_1_QF	25634	BUCKWIND	115	0.00	QF	LA Basin	Eastern, Valley-Devers	Aug NQC	QF/Selfgen
869	SCE	CABZON_1_WINDA1	29290	CABAZON	33	0.00	1	LA Basin	Eastern, Valley-Devers	Aug NQC	Wind
870	SCE	CAPWD_1_QF	25633	CAPWIND	115	0.00	QF	LA Basin	Eastern, Valley-Devers	Aug NQC	QF/Selfgen
871	SCE	CENTER_2_RHONDO	25810	CENTER EQFD	12.5	0.00	EQ	LA Basin	Western		QF/Selfgen
872	SCE	CENTER_2_SOLAR1				0.00		LA Basin	Western	Not modeled Energy Only	Solar
873	SCE	CENTER_6_PEAKER	29308	CTRPKGEN	13.8	0.00	1	LA Basin	Western		Market

Attachment A - List of physical resources accounted for in the 2027 and 2031 Local Capacity Technical Studies
Physical Res. 2027 LCR

874	SCE	CENTER_6_PEAKER	25187	WDT1429_BATT	0.48	0.00	1	LA Basin	Western	Start-up/Back-up	Battery
875	SCE	CENTRY_6_PL1X4	25302	CLTNCTRY	12	0.00	1	LA Basin	Eastern	Aug NQC	MUNI
876	SCE	CENTRY_6_PL1X4	25302	CLTNCTRY	12	0.00	2	LA Basin	Eastern	Aug NQC	MUNI
877	SCE	CENTRY_6_PL1X4	25302	CLTNCTRY	12	0.00	3	LA Basin	Eastern	Aug NQC	MUNI
878	SCE	CENTRY_6_PL1X4	25302	CLTNCTRY	12	0.00	4	LA Basin	Eastern	Aug NQC	MUNI
879	SCE	CHEVMN_2_UNITS	24023	CHEVGEN 2	13.8	0.00	A	LA Basin	Western, El Nido	Aug NQC	Net Seller
880	SCE	CHEVMN_2_UNITS	24022	CHEVGEN 1	13.8	0.00	B	LA Basin	Western, El Nido	Aug NQC	Net Seller
881	SCE	CHEVMN_2_UNITS	29016	CHEVGEN	13.8	0.00	C1	LA Basin	Western, El Nido	Aug NQC	Net Seller
882	SCE	CHEVMN_2_UNITS	29016	CHEVGEN	13.8	0.00	C2	LA Basin	Western, El Nido	Aug NQC	Net Seller
883	SCE	CHEVMN_2_UNITS	29009	CHEVGEN 5	13.8	0.00	D1	LA Basin	Western, El Nido	Aug NQC	Net Seller
884	SCE	CHEVMN_2_UNITS	29009	CHEVGEN 5	13.8	0.00	D2	LA Basin	Western, El Nido	Aug NQC	Net Seller
885	SCE	CHINO_2_APEBT1	25180	WDT1445BESS_	0.48	0.00	1	LA Basin	Eastern	Aug NQC	Battery
886	SCE	CHINO_2_JURUPA				0.00		LA Basin	Eastern	Not modeled Energy Only	Market
887	SCE	CHINO_2_PESBT1	25812	CHINO EQFC	12.5	0.00	BS	LA Basin	Eastern		Battery
888	SCE	CHINO_2_QF	25812	CHINO EQFC	12.5	0.00	SY	LA Basin	Eastern	Aug NQC	QF/Selfgen
889	SCE	CHINO_2_SASOLR				0.00		LA Basin	Eastern	Not modeled Energy Only	Solar
890	SCE	CHINO_2_SOLAR2				0.00		LA Basin	Eastern	Not modeled Energy Only	Solar
891	SCE	CHINO_6_CIMGEN	24026	CIMGEN	13.8	0.00	D1	LA Basin	Eastern	Aug NQC	QF/Selfgen
892	SCE	CHINO_6_CIMGEN	24026	CIMGEN	13.8	0.00	D2	LA Basin	Eastern	Aug NQC	QF/Selfgen
893	SCE	COLTON_6_AGUAM1	25303	CLTNAGUA	13.8	0.00	1	LA Basin	Eastern	Aug NQC	MUNI
894	SCE	CONDOR_2_CDRBT1	240343	WDT1659_G	0.48	0.00	1	LA Basin	Eastern, West of Devers		Battery
895	SCE	CORONS_2_SOLAR				0.00		LA Basin	Eastern	Not modeled Energy Only	Solar
896	SCE	CORONS_6_CLRWTR	29338	CLRWTRCT	13.8	0.00	G1	LA Basin	Eastern		MUNI
897	SCE	CORONS_6_CLRWTR	29340	CLRWTRST	13.8	0.00	S1	LA Basin	Eastern		MUNI
898	SCE	DELAMO_2_ALASB2	25818	DELAMO EQFD	12.5	0.00	EQ	LA Basin	Western	Aug NQC	Hybrid
899	SCE	DELAMO_2_SOLAR1	25818	DELAMO EQFD	12.5	0.00	EQ	LA Basin	Western	Aug NQC	Solar
900	SCE	DELAMO_2_SOLAR2	25818	DELAMO EQFD	12.5	0.00	EQ	LA Basin	Western	Aug NQC	Solar
901	SCE	DELAMO_2_SOLAR3	25818	DELAMO EQFD	12.5	0.00	EQ	LA Basin	Western	Aug NQC	Solar
902	SCE	DELAMO_2_SOLAR4	25818	DELAMO EQFD	12.5	0.00	EQ	LA Basin	Western	Aug NQC	Solar

Attachment A - List of physical resources accounted for in the 2027 and 2031 Local Capacity Technical Studies
Physical Res. 2027 LCR

903	SCE	DELAMO_2_SOLAR5	25818	DELAMO EQFD	12.5	0.00	EQ	LA Basin	Western	Aug NQC	Solar
904	SCE	DELAMO_2_SOLAR6	25818	DELAMO EQFD	12.5	0.00	EQ	LA Basin	Western	Aug NQC	Solar
905	SCE	DELAMO_2_SOLRC1				0.00		LA Basin	Western	Not modeled Energy Only	Solar
906	SCE	DELAMO_2_SOLRD				0.00		LA Basin	Western	Not modeled Energy Only	Solar
907	SCE	DEVERS_1_SEPV05				0.00		LA Basin	Eastern, Valley-Devers	Not modeled Energy Only	Market
908	SCE	DEVERS_1_SOLAR				0.00		LA Basin	Eastern, Valley-Devers	Not modeled Energy Only	Solar
909	SCE	DEVERS_1_SOLAR1				0.00		LA Basin	Eastern, Valley-Devers	Not modeled Energy Only	Solar
910	SCE	DEVERS_1_SOLAR2				0.00		LA Basin	Eastern, Valley-Devers	Not modeled Energy Only	Solar
911	SCE	DEVERS_2_CS2SR4				0.00		LA Basin	Eastern, Valley-Devers	Not modeled Energy Only	Solar
912	SCE	DEVERS_2_DHSPG2				0.00		LA Basin	Eastern, Valley-Devers	Not modeled Energy Only	Market
913	SCE	DMDVLY_1_UNITS	25424	ESRP P1	6.9	0.00	2	LA Basin	Eastern	Aug NQC	QF/Selfgen
914	SCE	DMDVLY_1_UNITS	25424	ESRP P1	6.9	0.00	3	LA Basin	Eastern	Aug NQC	QF/Selfgen
915	SCE	DMDVLY_1_UNITS	25424	ESRP P1	6.9	0.00	4	LA Basin	Eastern	Aug NQC	QF/Selfgen
916	SCE	DMDVLY_1_UNITS	25425	ESRP P2	6.9	0.00	6	LA Basin	Eastern	Aug NQC	QF/Selfgen
917	SCE	DMDVLY_1_UNITS	25425	ESRP P2	6.9	0.00	7	LA Basin	Eastern	Aug NQC	QF/Selfgen
918	SCE	DMDVLY_1_UNITS	25425	ESRP P2	6.9	0.00	8	LA Basin	Eastern	Aug NQC	QF/Selfgen
919	SCE	DMDVLY_1_UNITS	25426	ESRP P3	6.9	0.00	10	LA Basin	Eastern	Aug NQC	QF/Selfgen
920	SCE	DMDVLY_1_UNITS	25426	ESRP P3	6.9	0.00	11	LA Basin	Eastern	Aug NQC	QF/Selfgen
921	SCE	DMDVLY_1_UNITS	25426	ESRP P3	6.9	0.00	12	LA Basin	Eastern	Aug NQC	QF/Selfgen
922	SCE	DREWS_6_PL1X4	25301	CLTNDREW_G12	12.5	0.00	1	LA Basin	Eastern	Aug NQC	MUNI
923	SCE	DREWS_6_PL1X4	25301	CLTNDREW_G12	12.5	0.00	2	LA Basin	Eastern	Aug NQC	MUNI
924	SCE	DREWS_6_PL1X4	25400	CLTNDREW_G34	12.5	0.00	3	LA Basin	Eastern	Aug NQC	MUNI

Attachment A - List of physical resources accounted for in the 2027 and 2031 Local Capacity Technical Studies
Physical Res. 2027 LCR

925	SCE	DREWS_6_PL1X4	25400	CLTNDREW_G34	12.5	0.00	4	LA Basin	Eastern	Aug NQC	MUNI
926	SCE	DVLCYN_1_UNITS	25648	DVLCYN1G	13.8	0.00	1	LA Basin	Eastern	Aug NQC	MUNI
927	SCE	DVLCYN_1_UNITS	25649	DVLCYN2G	13.8	0.00	2	LA Basin	Eastern	Aug NQC	MUNI
928	SCE	DVLCYN_1_UNITS	25603	DVLCYN3G	13.8	0.00	3	LA Basin	Eastern	Aug NQC	MUNI
929	SCE	DVLCYN_1_UNITS	25604	DVLCYN4G	13.8	0.00	4	LA Basin	Eastern	Aug NQC	MUNI
930	SCE	DYLAN_2_BMTBT1	240169	WDT1648_G	0.39	0.00	1	LA Basin	Eastern, West of Devers		Battery
931	SCE	ECASCO_2_SJGBT1	240288	WDT1558_G	0.55	0.00	1	LA Basin	Eastern, West of Devers	Energy Only	Battery
932	SCE	ELLIS_2_QF	24325	ORCOGEN	13.8	0.00	1	LA Basin	Western	Aug NQC	QF/Selfgen
933	SCE	ELSEGN_2_UN1011	29904	ELSEG5GT	16.5	0.00	5	LA Basin	Western, El Nido	Aug NQC	Market
934	SCE	ELSEGN_2_UN1011	29903	ELSEG6ST	13.8	0.00	6	LA Basin	Western, El Nido	Aug NQC	Market
935	SCE	ELSEGN_2_UN2021	29902	ELSEG7GT	16.5	0.00	7	LA Basin	Western, El Nido	Aug NQC	Market
936	SCE	ELSEGN_2_UN2021	29901	ELSEG8ST	13.8	0.00	8	LA Basin	Western, El Nido	Aug NQC	Market
937	SCE	ESNHWR_2_CS1BT3	241501	EISNHOW_EQFD	33	0.00	B2	LA Basin	Eastern, Valley-Devers		Battery
938	SCE	ESNHWR_2_HDSBT2	241501	EISNHOW_EQFD	33	0.00	B1	LA Basin	Eastern, Valley-Devers		Battery
939	SCE	ESNHWR_2_WC1BT1	240150	DEVERS FC	12.5	0.00	B	LA Basin	Eastern, Valley-Devers		Battery
940	SCE	ETIWND_2_CHMPNE				0.00		LA Basin	Eastern	Not modeled Energy Only	Market
941	SCE	ETIWND_2_FONTNA	25822	ETIWANDA EQFD	12.5	0.00	EQ	LA Basin	Eastern	Aug NQC	QF/Selfgen
942	SCE	ETIWND_2_SOLAR1	25822	ETIWANDA EQFD	12.5	0.00	EQ	LA Basin	Eastern	Aug NQC	Solar
943	SCE	ETIWND_2_SOLAR2				0.00		LA Basin	Eastern	Not modeled Energy Only	Solar
944	SCE	ETIWND_2_SOLAR5				0.00		LA Basin	Eastern	Not modeled Energy Only	Solar
945	SCE	ETIWND_2_UNIT1	24071	INLAND	12.5	0.00	1	LA Basin	Eastern	Aug NQC	QF/Selfgen
946	SCE	ETIWND_2_UNIT1	24071	INLAND	12.5	0.00	2	LA Basin	Eastern	Aug NQC	QF/Selfgen
947	SCE	ETIWND_6_GRPLND	29305	ETWPKGEN	13.8	0.00	1	LA Basin	Eastern		Market
948	SCE	ETIWND_6_GRPLND	25188	WDT1430_BESS	13.8	0.00	1	LA Basin	Eastern	Start-up/Back-up	Battery
949	SCE	ETIWND_6_INEBT1	240354	WDT1669_G	0.69	0.00	1	LA Basin	Eastern		Battery
950	SCE	ETIWND_6_MWDETI	25422	ETI MWDG	13.8	0.00	1	LA Basin	Eastern	Aug NQC	Market

Attachment A - List of physical resources accounted for in the 2027 and 2031 Local Capacity Technical Studies
Physical Res. 2027 LCR

951	SCE	GARNET_1_SOLAR				0.00		LA Basin	Eastern, Valley-Devers	Not modeled Energy Only	Solar
952	SCE	GARNET_1_SOLAR2	25827	GARNET FD	34.5	0.00	PV	LA Basin	Eastern, Valley-Devers	Aug NQC	Solar
953	SCE	GARNET_1_WIND	24815	GARNET	115	0.00	G2	LA Basin	Eastern, Valley-Devers	Aug NQC	Wind
954	SCE	GARNET_1_WINDS				0.00		LA Basin	Eastern, Valley-Devers	Not modeled Aug NQC	Wind
955	SCE	GARNET_1_WT3WND	24815	GARNET	115	0.00	W2	LA Basin	Eastern, Valley-Devers	Energy Only	Market
956	SCE	GARNET_2_COAWD2				0.00		LA Basin	Eastern, Valley-Devers	Not modeled Aug NQC	Wind
957	SCE	GARNET_2_HYDRO				0.00		LA Basin	Eastern, Valley-Devers	Not modeled Aug NQC	Market
958	SCE	GARNET_2_WIND1				0.00		LA Basin	Eastern, Valley-Devers	Not modeled Aug NQC	Wind
959	SCE	GARNET_2_WIND2				0.00		LA Basin	Eastern, Valley-Devers	Not modeled Aug NQC	Wind
960	SCE	GARNET_2_WIND3				0.00		LA Basin	Eastern, Valley-Devers	Not modeled Aug NQC	Wind
961	SCE	GARNET_2_WIND4	24815	GARNET	115	0.00	QF	LA Basin	Eastern, Valley-Devers	Aug NQC	Wind
962	SCE	GARNET_2_WIND5	25827	GARNET FD	34.5	0.00	W	LA Basin	Eastern, Valley-Devers	Aug NQC	Wind
963	SCE	GLNARM_2_UNIT 5	29013	GLENARM5_CT	13.8	0.00	CT	LA Basin	Western		MUNI
964	SCE	GLNARM_2_UNIT 5	29014	GLENARM5_ST	13.8	0.00	ST	LA Basin	Western		MUNI
965	SCE	GLNARM_7_UNIT 1	29005	PASADNA1	13.8	0.00	1	LA Basin	Western		MUNI
966	SCE	GLNARM_7_UNIT 2	29006	PASADNA2	13.8	0.00	1	LA Basin	Western		MUNI
967	SCE	GLNARM_7_UNIT 3	25042	PASADNA3	13.8	0.00	1	LA Basin	Western		MUNI
968	SCE	GLNARM_7_UNIT 4	25043	PASADNA4	13.8	0.00	1	LA Basin	Western		MUNI
969	SCE	HARBGN_7_UNITS	24062	HARBOR G	13.8	0.00	1	LA Basin	Western		Market
970	SCE	HARBGN_7_UNITS	24062	HARBOR G	13.8	0.00	HP	LA Basin	Western		Market
971	SCE	HARBGN_7_UNITS	25510	HARBORG4	4.16	0.00	LP	LA Basin	Western		Market
972	SCE	HINSON_6_LBECH1	24170	LBEACH12	13.8	0.00	1	LA Basin	Western		Market
973	SCE	HINSON_6_LBECH2	24170	LBEACH12	13.8	0.00	2	LA Basin	Western		Market
974	SCE	HINSON_6_LBECH3	24171	LBEACH34	13.8	0.00	3	LA Basin	Western		Market
975	SCE	HINSON_6_LBECH4	24171	LBEACH34	13.8	0.00	4	LA Basin	Western		Market
976	SCE	HNTGBH_2_PL1X3	24580	HUNTBCH CTG1	18	0.00	G1	LA Basin	Western		Market
977	SCE	HNTGBH_2_PL1X3	24581	HUNTBCH CTG2	18	0.00	G2	LA Basin	Western		Market
978	SCE	HNTGBH_2_PL1X3	24582	HUNTBCH STG	18	0.00	S1	LA Basin	Western		Market
979	SCE	HNTGBH_7_UNIT 2	24067	HUNT2 G	13.8	0.00	RH	LA Basin	Western	Strategic Reserve	Market
980	SCE	HNTGBH_7_UNIT 2	24067	HUNT2 G	13.8	0.00	RL	LA Basin	Western	Strategic Reserve	Market

Attachment A - List of physical resources accounted for in the 2027 and 2031 Local Capacity Technical Studies
Physical Res. 2027 LCR

981	SCE	INDIGO_1_UNIT 1	29190	INDIGO G4	13.8	0.00	4	LA Basin	Eastern, Valley-Devers		Market
982	SCE	INDIGO_1_UNIT 2	29191	INDIGO G5	13.8	0.00	5	LA Basin	Eastern, Valley-Devers		Market
983	SCE	INDIGO_1_UNIT 3	29180	INDIGO G3	13.8	0.00	3	LA Basin	Eastern, Valley-Devers		Market
984	SCE	JOANEC_2_ST3BT3	240292	SNTANSG3	0.55	0.00	3	LA Basin	Western		Battery
985	SCE	JOANEC_2_STABT1	25663	SNTANSG1	0.55	0.00	1	LA Basin	Western		Battery
986	SCE	JOANEC_2_STABT2	240289	SNTANSG2	0.55	0.00	2	LA Basin	Western		Battery
987	SCE	JOHANN_2_JOSBT1	25729	JOHANNA_PRP	66	0.00	EQ	LA Basin	Western		Battery
988	SCE	JOHANN_2_JOSBT2	25729	JOHANNA_PRP	66	0.00	EQ	LA Basin	Western		Battery
989	SCE	JOHANN_2_OCEBT2	25729	JOHANNA_PRP	66	0.00	EQ	LA Basin	Western		Battery
990	SCE	JOHANN_2_OCEBT3	25729	JOHANNA_PRP	66	0.00	EQ	LA Basin	Western		Battery
991	SCE	LACIEN_2_VENICE	24337	VENICE	13.8	0.00	1	LA Basin	Western, El Nido	Aug NQC	MUNI
992	SCE	LAGBEL_2_CBPBT1	240335	WDT1641_G	0.6	0.00	1	LA Basin	Western, El Nido		Battery
993	SCE	LGHTHP_6_ICEGEN	24070	ICEGEN	13.8	0.00	GT	LA Basin	Western	Aug NQC	QF/Selfgen
994	SCE	LGHTHP_6_ICEGEN	24070	ICEGEN	13.8	0.00	ST	LA Basin	Western	Aug NQC	QF/Selfgen
995	SCE	MARVEL_2_MARBT3	25239	MARVEL_ES3	34.5	0.00	1	LA Basin	Eastern, Valley-Devers		Battery
996	SCE	MARVEL_2_MARBX2	25231	MARVEL_ES1	34.5	0.00	1	LA Basin	Eastern, Valley-Devers		Battery
997	SCE	MARVEL_2_MARBX2	25235	MARVEL_ES2	34.5	0.00	1	LA Basin	Eastern, Valley-Devers		Battery
998	SCE	MIRLOM_2_CORONA	25844	MIRALOMA EQFD	12.5	0.00	EQ	LA Basin	Eastern	Aug NQC	QF/Selfgen
999	SCE	MIRLOM_2_CREST	25844	MIRALOMA EQFD	12.5	0.00	EQ	LA Basin	Eastern	Aug NQC	Market
1000	SCE	MIRLOM_2_LNDFL	25844	MIRALOMA EQFD	12.5	0.00	EQ	LA Basin	Eastern	Aug NQC	Market
1001	SCE	MIRLOM_2_MLBBTA	25185	WDT1425_G1	0.48	0.00	1	LA Basin	Eastern	Aug NQC	Battery
1002	SCE	MIRLOM_2_MLBBTB	25186	WDT1426_G2	0.48	0.00	1	LA Basin	Eastern	Aug NQC	Battery
1003	SCE	MIRLOM_2_TEMESC	25844	MIRALOMA EQFD	12.5	0.00	EQ	LA Basin	Eastern	Aug NQC	QF/Selfgen
1004	SCE	MIRLOM_6_PEAKER	29307	MRLPKGEN	13.8	0.00	1	LA Basin	Eastern		Market
1005	SCE	MIRLOM_7_MWDLKM				0.00		LA Basin	Eastern	Not modeled Aug NQC	MUNI
1006	SCE	MOJAVE_1_SIPHON	25657	MJVSPHN1	13.8	0.00	1	LA Basin	Eastern	Aug NQC	Market
1007	SCE	MOJAVE_1_SIPHON	25657	MJVSPHN1	13.8	0.00	2	LA Basin	Eastern	Aug NQC	Market
1008	SCE	MOJAVE_1_SIPHON	25657	MJVSPHN1	13.8	0.00	3	LA Basin	Eastern	Aug NQC	Market
1009	SCE	MTWIND_1_MVPWD1	29064	MOUNTWND_1G	0.6	0.00	1	LA Basin	Eastern, Valley-Devers	Aug NQC	Wind
1010	SCE	MTWIND_1_UNIT 3	29069	MOUNTWND_3G	0.6	0.00	1	LA Basin	Eastern, Valley-Devers	Aug NQC	Wind
1011	SCE	OLINDA_2_COYCRK				0.00		LA Basin	Western	Not modeled	QF/Selfgen

Attachment A - List of physical resources accounted for in the 2027 and 2031 Local Capacity Technical Studies
Physical Res. 2027 LCR

1012	SCE	OLINDA_2_LNDFL2	29011	BREAPWR2	13.8	0.00	C1	LA Basin	Western	Aug NQC	Market
1013	SCE	OLINDA_2_LNDFL2	29011	BREAPWR2	13.8	0.00	C2	LA Basin	Western	Aug NQC	Market
1014	SCE	OLINDA_2_LNDFL2	29011	BREAPWR2	13.8	0.00	C3	LA Basin	Western	Aug NQC	Market
1015	SCE	OLINDA_2_LNDFL2	29011	BREAPWR2	13.8	0.00	C4	LA Basin	Western	Aug NQC	Market
1016	SCE	OLINDA_2_LNDFL2	29011	BREAPWR2	13.8	0.00	S1	LA Basin	Western	Aug NQC	Market
1017	SCE	OLINDA_7_BLKSND				0.00		LA Basin	Western	Not modeled Aug NQC	Market
1018	SCE	PADUA_2_ONTARO				0.00		LA Basin	Eastern	Not modeled Aug NQC	QF/Selfgen
1019	SCE	PADUA_2_SOLAR1				0.00		LA Basin	Eastern	Not modeled Energy Only	Solar
1020	SCE	PADUA_6_MWDSDM	25851	PADUA EQFC	12.5	0.00	HY	LA Basin	Eastern	Aug NQC	MUNI
1021	SCE	PADUA_6_QF	25851	PADUA EQFC	12.5	0.00	T	LA Basin	Eastern	Aug NQC	QF/Selfgen
1022	SCE	PADUA_7_SDIMAS				0.00		LA Basin	Eastern	Not modeled Aug NQC	Market
1023	SCE	PANERO_2_MWPWD1				0.00		LA Basin	Eastern, Valley-Devers	Not modeled Aug NQC	Wind
1024	SCE	PWEST_1_UNIT	24815	GARNET	115	0.00	PC	LA Basin	Eastern, Valley-Devers	Aug NQC	Market
1025	SCE	RENWD_1_QF	25636	RENWIND	115	0.00	Q1	LA Basin	Eastern, Valley-Devers	Aug NQC	QF/Selfgen
1026	SCE	RENWD_1_QF	25636	RENWIND	115	0.00	Q2	LA Basin	Eastern, Valley-Devers	Aug NQC	QF/Selfgen
1027	SCE	ROMOLA_5_MPBBT1	240214	MENIFEE_G1	0.66	0.00	1	LA Basin	Eastern, Valley		Battery
1028	SCE	ROMOLA_5_MPBBT2	240215	MENIFEE_G2	0.66	0.00	2	LA Basin	Eastern, Valley		Battery
1029	SCE	ROMOLA_5_MPBBT3	240216	MENIFEE_G3	0.66	0.00	3	LA Basin	Eastern, Valley		Battery
1030	SCE	ROMOLA_5_MPBBT4	240217	MENIFEE_G4	0.66	0.00	4	LA Basin	Eastern, Valley		Battery
1031	SCE	ROMOLA_5_MPBBT5	240218	MENIFEE_G5	0.66	0.00	5	LA Basin	Eastern, Valley		Battery
1032	SCE	RVSIDE_2_RERCU3	24299	RERC2G3	13.8	0.00	1	LA Basin	Eastern		MUNI
1033	SCE	RVSIDE_2_RERCU4	24300	RERC2G4	13.8	0.00	1	LA Basin	Eastern		MUNI
1034	SCE	RVSIDE_6_RERCU1	24242	RERC1G	13.8	0.00	1	LA Basin	Eastern		MUNI
1035	SCE	RVSIDE_6_RERCU2	24243	RERC2G	13.8	0.00	1	LA Basin	Eastern		MUNI
1036	SCE	RVSIDE_6_SOLAR1				0.00		LA Basin	Eastern	Not modeled Aug NQC	Solar
1037	SCE	RVSIDE_6_SPRING	24240	SPRINGS1	13.8	0.00	1	LA Basin	Eastern		Market
1038	SCE	RVSIDE_6_SPRING	24241	SPRINGS3	13.8	0.00	1	LA Basin	Eastern		Market
1039	SCE	RVSIDE_6_SPRING	24240	SPRINGS1	13.8	0.00	2	LA Basin	Eastern		Market
1040	SCE	RVSIDE_6_SPRING	24241	SPRINGS3	13.8	0.00	2	LA Basin	Eastern		Market

Attachment A - List of physical resources accounted for in the 2027 and 2031 Local Capacity Technical Studies
Physical Res. 2027 LCR

1041	SCE	SANITR_6_UNITS	24324	SANIGEN	13.8	0.00	R1	LA Basin	Eastern	Aug NQC	QF/Selfgen
1042	SCE	SANTGO_2_LNDFL1	24341	COYGEN	13.8	0.00	R1	LA Basin	Western	Aug NQC	Market
1043	SCE	SANWD_1_QF	29072	SANWIND_G	0.48	0.00	1	LA Basin	Eastern, Valley-Devers	Aug NQC	Wind
1044	SCE	SBERDO_2_PSP3	24921	MNTV-G3A	18	0.00	1	LA Basin	Eastern, West of Devers		Market
1045	SCE	SBERDO_2_PSP3	24922	MNTV-G3B	18	0.00	1	LA Basin	Eastern, West of Devers		Market
1046	SCE	SBERDO_2_PSP3	24923	MNTV-ST3	18	0.00	1	LA Basin	Eastern, West of Devers		Market
1047	SCE	SBERDO_2_PSP4	24924	MNTV-G4A	18	0.00	1	LA Basin	Eastern, West of Devers		Market
1048	SCE	SBERDO_2_PSP4	24925	MNTV-G4B	18	0.00	1	LA Basin	Eastern, West of Devers		Market
1049	SCE	SBERDO_2_PSP4	24926	MNTV-ST4	18	0.00	1	LA Basin	Eastern, West of Devers		Market
1050	SCE	SBERDO_2_SNTANA	25861	SNBRDNO FD2	12.5	0.00	PV	LA Basin	Eastern, West of Devers	Aug NQC	Solar
1051	SCE	SBERDO_6_MILLCK	25863	SNBRDNO FD1	12.5	0.00	EQ	LA Basin	Eastern, West of Devers	Aug NQC	QF/Selfgen
1052	SCE	SEAWND_2_AMWWD1				0.00		LA Basin	Eastern, Valley-Devers	Not modeled Aug NQC	Wind
1053	SCE	SENTNL_2_CTG1	29101	SENTINEL_G1	13.8	0.00	1	LA Basin	Eastern, Valley-Devers		Market
1054	SCE	SENTNL_2_CTG2	29102	SENTINEL_G2	13.8	0.00	1	LA Basin	Eastern, Valley-Devers		Market
1055	SCE	SENTNL_2_CTG3	29103	SENTINEL_G3	13.8	0.00	1	LA Basin	Eastern, Valley-Devers		Market
1056	SCE	SENTNL_2_CTG4	29104	SENTINEL_G4	13.8	0.00	1	LA Basin	Eastern, Valley-Devers		Market
1057	SCE	SENTNL_2_CTG5	29105	SENTINEL_G5	13.8	0.00	1	LA Basin	Eastern, Valley-Devers		Market
1058	SCE	SENTNL_2_CTG6	29106	SENTINEL_G6	13.8	0.00	1	LA Basin	Eastern, Valley-Devers		Market
1059	SCE	SENTNL_2_CTG7	29107	SENTINEL_G7	13.8	0.00	1	LA Basin	Eastern, Valley-Devers		Market
1060	SCE	SENTNL_2_CTG8	29108	SENTINEL_G8	13.8	0.00	1	LA Basin	Eastern, Valley-Devers		Market
1061	SCE	STANTN_2_SBEBX2	25675	WH_STN_5	0.55	0.00	1	LA Basin	Western		Battery
1062	SCE	STANTN_2_SBEBX2	25677	WH_STN_7	0.55	0.00	1	LA Basin	Western		Battery
1063	SCE	STANTN_2_STAGT1	25670	WH_STN_1	13.8	0.00	1	LA Basin	Western		Market
1064	SCE	STANTN_2_STAGT2	25671	WH_STN_2	13.8	0.00	1	LA Basin	Western		Market
1065	SCE	TIFFNY_1_DILLON	29021	WINTEC6	115	0.00	1	LA Basin	Eastern, Valley-Devers	Aug NQC	Wind
1066	SCE	TRNSWD_1_QF	25746	TRANWND_1G	0.4	0.00	1	LA Basin	Eastern, Valley-Devers	Aug NQC	Wind
1067	SCE	TRNSWD_1_QF	25749	TRANWND_2G	0.4	0.00	2	LA Basin	Eastern, Valley-Devers	Aug NQC	Wind
1068	SCE	VALLEY_5_ORTBT1	240349	WDT1636_G	0.6	0.00	EQ	LA Basin	Eastern, Valley, Valley-Devers		Battery

Attachment A - List of physical resources accounted for in the 2027 and 2031 Local Capacity Technical Studies
Physical Res. 2027 LCR

1069	SCE	VALLEY_5_PERRIS	25872	VALLEYS EQFD	12.5	0.00	T	LA Basin	Eastern, Valley, Valley-Devers	Aug NQC	QF/Selfgen
1070	SCE	VALLEY_5_REDMTN	25872	VALLEYS EQFD	12.5	0.00	PV	LA Basin	Eastern, Valley, Valley-Devers	Aug NQC	QF/Selfgen
1071	SCE	VALLEY_5_SOLAR1				0.00		LA Basin	Eastern, Valley, Valley-Devers	Not modeled Energy Only	Solar
1072	SCE	VALLEY_5_SOLAR2	25846	WDT786G	34.5	0.00	EQ	LA Basin	Eastern, Valley, Valley-Devers	Aug NQC	Solar
1073	SCE	VENWD_1_WIND3	25645	VENWIND	115	0.00	EU	LA Basin	Eastern, Valley-Devers	Aug NQC	Wind
1074	SCE	VERNON_6_GONZL1				0.00		LA Basin	Western	Not modeled	MUNI
1075	SCE	VERNON_6_GONZL2				0.00		LA Basin	Western	Not modeled	MUNI
1076	SCE	VERNON_6_MALBRG	24239	MALBRG1G	13.8	0.00	C1	LA Basin	Western		MUNI
1077	SCE	VERNON_6_MALBRG	24240	MALBRG2G	13.8	0.00	C2	LA Basin	Western		MUNI
1078	SCE	VERNON_6_MALBRG	24241	MALBRG3G	13.8	0.00	S3	LA Basin	Western		MUNI
1079	SCE	VILLPK_2_VALLYV				0.00		LA Basin	Western	Not modeled Aug NQC	QF/Selfgen
1080	SCE	VILLPK_6_MWDYOR				0.00		LA Basin	Western	Not modeled Aug NQC	MUNI
1081	SCE	VISTA_6_QF	25887	VSTA_EQFD	12.5	0.00	EQ	LA Basin	Eastern	Aug NQC	QF/Selfgen
1082	SCE	WALCRK_2_CTG1	29201	WALCRKG1	13.8	0.00	1	LA Basin	Western		Market
1083	SCE	WALCRK_2_CTG2	29202	WALCRKG2	13.8	0.00	1	LA Basin	Western		Market
1084	SCE	WALCRK_2_CTG3	29203	WALCRKG3	13.8	0.00	1	LA Basin	Western		Market
1085	SCE	WALCRK_2_CTG4	29204	WALCRKG4	13.8	0.00	1	LA Basin	Western		Market
1086	SCE	WALCRK_2_CTG5	29205	WALCRKG5	13.8	0.00	1	LA Basin	Western		Market
1087	SCE	WALNUT_2_SOLAR				0.00		LA Basin	Western	Not modeled Energy Only	Solar
1088	SCE	WALNUT_6_HILLGEN				0.00		LA Basin	Western	Not modeled Aug NQC	Net Seller
1089	SCE	WALNUT_7_WCOVST				0.00		LA Basin	Western	Not modeled Aug NQC	Market
1090	SCE	WHTWTR_1_WINDA1	241001	WHITEWTR_G	0.58	0.00	1	LA Basin	Eastern, Valley-Devers	Aug NQC	Wind
1091	SCE	ZZ_BUCKWD_7_WINTCV	25634	BUCKWIND	115	0.00	W5	LA Basin	Eastern, Valley-Devers	Repowering	Wind
1092	SCE	ZZ_DEVERS_1_QF	25639	SEAWIND	115	0.00	QF	LA Basin	Eastern, Valley-Devers	Mothballed	QF/Selfgen
1093	SCE	ZZ_DEVERS_1_QF	25632	TERAWND	115	0.00	QF	LA Basin	Eastern, Valley-Devers	Mothballed	QF/Selfgen
1094	SCE	ZZ_GARNET_1_UNITS	24815	GARNET	115	0.00	G1	LA Basin	Eastern, Valley-Devers	Mothballed	Market

Attachment A - List of physical resources accounted for in the 2027 and 2031 Local Capacity Technical Studies
Physical Res. 2027 LCR

1095	SCE	ZZ_GARNET_2_HYDRO	25827	GARNET FD	34.5	0.00	T	LA Basin	Eastern, Valley-Devers	Aug NQC	Market
1096	SCE	ZZ_HINSON_2_CTCSR1	25892	HINSON EQDS	12.5	0.00	P1	LA Basin	Western	Energy Only	Solar
1097	SCE	ZZ_JOANEC_2_ST3BT4	240295	SNTANSG4	0.55	40.00	4	LA Basin	Western	No NQC - P max	Battery
1098	SCE	ZZ_JOHANN_2_T1BBT1	240498	JOHANNA EQFD	12.5	1.40	BS	LA Basin	Western	WDAT1428 - No NQC - est. data	Battery
1099	SCE	ZZ_LAGBEL_2_CDCSR1	241503	LAGUBELL_EQF	16	0.00	P3	LA Basin	Western, El Nido		Solar
1100	SCE	ZZ_LAGBEL_2_EDCSR1	241503	LAGUBELL_EQF	16	0.00	P1	LA Basin	Western, El Nido		Solar
1101	SCE	ZZ_LAGBEL_2_EDCSR2	241503	LAGUBELL_EQF	16	0.00	P2	LA Basin	Western, El Nido		Solar
1102	SCE	ZZ_LGHTHP_2_SBDSR1	240504	LITEHIPE EQF	12.5	0.00	P1	LA Basin	Western	Energy Only	Solar
1103	SCE	ZZ_LGHTHP_2_SBDSR2	240504	LITEHIPE EQF	12.5	0.00	P2	LA Basin	Western	Energy Only	Solar
1104	SCE	ZZ_MESAS_2_YORBT1	25842	MESACAL EQFD	16	0.01	B1	LA Basin	Western	No NQC - est. data	Solar
1105	SCE	ZZ_MOBGEN_6_UNIT 1	24094	MOBGEN1	13.8	0.00	1	LA Basin	Western, El Nido	No NQC - hist. data	QF/Selfgen
1106	SCE	ZZ_MOBGEN_6_UNIT 1	24329	MOBGEN2	13.8	0.00	1	LA Basin	Western, El Nido	No NQC - hist. data	QF/Selfgen
1107	SCE	ZZ_MTWIND_1_UNIT 2	29066	MOUNTWND_2G	0.6	0.00	1	LA Basin	Eastern, Valley-Devers	Mothballed	Wind
1108	SCE	ZZ_NA	24330	OUTFALL1	13.8	0.00	1	LA Basin	Western, El Nido	No NQC - hist. data	QF/Selfgen
1109	SCE	ZZ_NA	24331	OUTFALL2	13.8	0.00	1	LA Basin	Western, El Nido	No NQC - hist. data	QF/Selfgen
1110	SCE	ZZ_NA	24327	THUMSGEN	13.8	0.00	1	LA Basin	Western	No NQC - hist. data	QF/Selfgen
1111	SCE	ZZ_NA	25838	LA FRSA EQFD	16	0.07	EQ	LA Basin	Western	No NQC - est. data	Market
1112	SCE	ZZ_NA	25820	EL NIDO EQFD	16	0.09	EQ	LA Basin	Western, El Nido	No NQC - est. data	Solar
1113	SCE	ZZ_NA	25883	VILLAPK EQFD	12.5	0.14	EQ	LA Basin	Western	No NQC - est. data	Solar
1114	SCE	ZZ_NA	25889	WALNUT EQFD	12.5	0.20	EQ	LA Basin	Western	No NQC - est. data	Solar
1115	SCE	ZZ_NA	25892	HINSON EQDS	12.5	1.70	EQ	LA Basin	Western	No NQC - est. data	Market
1116	SCE	ZZ_NA	25857	RIOHNDO EQFD	12.5	5.00	HY	LA Basin	Western	No NQC - est. data	Market

Attachment A - List of physical resources accounted for in the 2027 and 2031 Local Capacity Technical Studies
Physical Res. 2027 LCR

1117	SCE	ZZ_NA	25857	RIOHNDO EQFD	12.5	0.06	PV	LA Basin	Western	No NQC - est. data	Solar
1118	SCE	ZZ_NA	25838	LA FRSA EQFD	16	0.20	PV	LA Basin	Western	No NQC - est. data	Solar
1119	SCE	ZZ_NA	25892	HINSON EQDS	12.5	0.70	PV	LA Basin	Western	No NQC - est. data	Solar
1120	SCE	ZZ_NA	240514	VALLEYSC EQF	12.5	1.10	PV	LA Basin	Eastern, Valley, Valley-Devers		Solar
1121	SCE	ZZ_NA	240505	MIRAGE EQFD	12.5	1.20	PV	LA Basin	Eastern, Valley-Devers	No NQC - est. data	Solar
1122	SCE	ZZ_NA	25812	CHINO EQFC	12.5	2.20	PV	LA Basin	Eastern		Solar
1123	SCE	ZZ_NA	240150	DEVERS FC	12.5	1.00	T	LA Basin	Eastern, Valley-Devers		Market
1124	SCE	ZZ_PADUA_2_SOLAR1	25851	PADUA EQFC	12.5	1.60	PV	LA Basin	Eastern		Solar
1125	SCE	ZZ_PANSEA_1_PANARO	25640	PANAERO	115	3.40	QF	LA Basin	Eastern, Valley-Devers		Wind
1126	SCE	ZZ_SANTGO_2_MABBT1	25192	WDT1406_G	0.48	0.00	1	LA Basin	Western		Battery
1127	SCE	ZZ_VENWD_1_WIND1	25645	VENWIND	115	0.00	Q1	LA Basin	Eastern, Valley-Devers	Mothballed	QF/Selfgen
1128	SCE	ZZ_VENWD_1_WIND2	25645	VENWIND	115	0.00	Q2	LA Basin	Eastern, Valley-Devers	Mothballed	QF/Selfgen
1129	SCE	ZZZ_New Unit	240002	CATHODE1_G	34.5	0.00	1	LA Basin	Western	Waiting TPD allocation	Battery
1130	SCE	ZZZ_New Unit	24899	WDT1510G	0.69	0.00	1	LA Basin	Eastern	Energy Only	Battery
1131	SCE	ZZZ_New Unit	240536	WDT1582	34.5	0.00	1	LA Basin	Western	No NQC - est. data	Solar
1132	SCE	ZZZ_New Unit	240474	WDT1583	34.5	0.00	1	LA Basin	Western	No NQC - est. data	Solar
1133	SCE	ZZZ_New Unit	240155	UNIMDGEN	12	1.00	1	LA Basin	Eastern, West of Devers	No NQC - est. data	Market
1134	SCE	ZZZ_New Unit	240501	WDT1392	0.48	10.00	1	LA Basin	Western	No NQC - est. data	Market
1135	SCE	ZZZ_New Unit	240502	WDT1393	0.48	10.00	1	LA Basin	Western	No NQC - est. data	Market
1136	SCE	ZZZ_New Unit	240536	WDT1582	34.5	10.00	1	LA Basin	Western	No NQC - P max	Battery
1137	SCE	ZZZ_New Unit	240474	WDT1583	34.5	10.00	1	LA Basin	Western	No NQC - P max	Battery
1138	SCE	ZZZ_New Unit	240513	WDT292A	12.5	10.00	1	LA Basin	Western	No NQC - est. data	Market
1139	SCE	ZZZ_New Unit	240451	WH_STN_8	0.55	10.00	1	LA Basin	Western	No NQC - P max	Battery
1140	SCE	ZZZ_New Unit	240452	WH_STN_9	0.55	10.00	1	LA Basin	Western	No NQC - P max	Battery
1141	SCE	ZZZ_New Unit	240533	WDT1602_G	0.39	20.00	1	LA Basin	Western, El Nido	No NQC - P max	Battery

Attachment A - List of physical resources accounted for in the 2027 and 2031 Local Capacity Technical Studies
Physical Res. 2027 LCR

1142	SCE	ZZZ_New Unit	250021	GOODRICH_BES	13.8	25.00	1	LA Basin	Western		Battery
1143	SCE	ZZZ_New Unit	241357	WDT1754_G	0.66	50.00	1	LA Basin	Western		Battery
1144	SCE	ZZZ_New Unit	240594	TOT1005_G_ES	0.65	75.00	1	LA Basin	Eastern, Valley-Devers	No NQC - est. data	Battery
1145	SCE	ZZZ_New Unit	240319	WDT1702_G	0.38	77.00	1	LA Basin	Western	No NQC - P max	Battery
1146	SCE	ZZZ_New Unit	240426	WDT1725_G	0.39	90.00	1	LA Basin	Western	No NQC - P max	Battery
1147	SCE	ZZZ_New Unit	240019	RAMPA_G	34.5	100.00	1	LA Basin	Eastern	No NQC - Pmax	Battery
1148	SCE	ZZZ_New Unit	240315	WDT1652_G	0.6	100.00	1	LA Basin	Western	No NQC - P max	Battery
1149	SCE	ZZZ_New Unit	240473	WDT1719_G	0.39	100.00	1	LA Basin	Eastern	No NQC - Pmax	Battery
1150	SCE	ZZZ_New Unit	240436	WDT1816-G	34.5	110.00	1	LA Basin	Western	No NQC - P max	Battery
1151	SCE	ZZZ_New Unit	241329	TOT1028_G1	0.63	200.00	1	LA Basin	Western		Battery
1152	SCE	ZZZ_New Unit	241339	TOT1033_B1	0.63	200.00	1	LA Basin	Western		Battery
1153	SCE	ZZZ_New Unit	240569	TOT906_G	0.69	200.00	1	LA Basin	Western		Battery
1154	SCE	ZZZ_New Unit	241013	TOT907_G	0.6	200.00	1	LA Basin	Western		Battery
1155	SCE	ZZZ_New Unit	240445	TOT927_G	0.39	250.00	1	LA Basin	Western	No NQC - P max	Battery
1156	SCE	ZZZ_New Unit	240004	CATHODE2_G	34.5	0.00	2	LA Basin	Western	Waiting TPD allocation	Battery
1157	SCE	ZZZ_New Unit	240512	LAS LOMA FD	12.5	8.83	2	LA Basin	Western	No NQC - est. data	Market
1158	SCE	ZZZ_New Unit	241328	TOT1028_G2	0.63	200.00	2	LA Basin	Western		Battery
1159	SCE	ZZZ_New Unit	241338	TOT1033_B2	0.63	200.00	2	LA Basin	Western		Battery
1160	SCE	ZZZ_New Unit	240509	SANTIAGO EQF	12.5	0.50	BS	LA Basin	Western	No NQC - est. data	Battery
1161	SCE	ZZZ_New Unit	25842	MESACAL EQFD	0.66	4.50	BS	LA Basin	Western	No NQC - est. data	Battery
1162	SCE	ZZZ_New Unit	240500	JOHANNA FD	12.5	0.00	EQ	LA Basin	Western	No NQC - est. data	Battery
1163	SCE	ZZZ_New Unit	25832	WDT334G	0.2	0.00	EQ	LA Basin	Eastern, Valley-Devers	Energy Only	Solar
1164	SCE	ZZZ_New Unit	25833	WDT458G	0.2	0.00	EQ	LA Basin	Eastern, Valley-Devers	Energy Only	Solar
1165	SCE	ZZZ_New Unit	240504	LITEHIPE EQF	12.5	0.60	EQ	LA Basin	Western	No NQC - est. data	Market
1166	SCE	ZZZ_New Unit	240158	VSTA BIO	12.5	1.00	EQ	LA Basin	Eastern	No NQC - est. data	Market
1167	SCE	ZZZ_New Unit	240159	VSTA GAS	12.5	1.00	EQ	LA Basin	Eastern	No NQC - est. data	Market
1168	SCE	ZZZ_New Unit	25834	HI DSRT	34.5	1.20	EQ	LA Basin	Eastern, Valley-Devers	No NQC - est. data	Market
1169	SCE	ZZZ_New Unit	25885	VSTA EQFD	12.5	3.70	EQ	LA Basin	Eastern		Market

Attachment A - List of physical resources accounted for in the 2027 and 2031 Local Capacity Technical Studies
Physical Res. 2027 LCR

1170	SCE	ZZZ_New Unit	240507	OLINDA EQF	12.5	5.15	EQ	LA Basin	Western	No NQC - est. data	Market
1171	SCE	ZZZ_New Unit	240495	DECLEZ EQ FC	12.5	9.67	EQ	LA Basin	Eastern	No NQC - est. data	Market
1172	SCE	ZZZ_New Unit	241354	WDT1683_G	0.48	65.00	EQ	LA Basin	Western		Battery
1173	SCE	ZZZ_New Unit	240346	WDT1635_G	0.6	80.00	EQ	LA Basin	Eastern, Valley, Valley-Devers		Battery
1174	SCE	ZZZ_New Unit	240516	MERCED EQFD	12.5	13.00	LG	LA Basin	Western	No NQC - est. data	Market
1175	SCE	ZZZ_New Unit	240498	JOHANNA EQFD	12.5	0.06	PV	LA Basin	Western	No NQC - est. data	Solar
1176	SCE	ZZZ_New Unit	240504	LITEHIPE EQF	12.5	0.06	PV	LA Basin	Western	No NQC - est. data	Solar
1177	SCE	ZZZ_New Unit	240509	SANTIAGO EQF	12.5	0.29	PV	LA Basin	Western	No NQC - est. data	Solar
1178	SCE	ZZZ_New Unit	25842	MESACAL EQFD	0.66	0.80	PV	LA Basin	Western	No NQC - est. data	Solar
1179	SCE	ZZZ_New Unit	240520	MILLIKEM FD3	12.5	1.36	PV	LA Basin	Eastern	No NQC - est. data	Solar
1180	SCE	ZZZ_New Unit	240498	JOHANNA EQFD	12.5	0.64	SY	LA Basin	Western	No NQC - est. data	Market
1181	SCE	ZZZ_New Unit	240504	LITEHIPE EQF	12.5	5.00	T	LA Basin	Western	No NQC - est. data	Market
1182	SCE	ZZZ_New Unit	240153	BOTTLE	34.5	1.70	W1	LA Basin	Eastern, Valley-Devers	No NQC - est. data	Wind
1183	SCE	ZZZ_New Unit	240526	WDT1131QFC	0.21	4.70	W1	LA Basin	Eastern, Valley-Devers	No NQC - est. data	Wind
1184	SCE	ZZZ_New Unit	240527	WDT016A	0.21	1.09	W2	LA Basin	Eastern, Valley-Devers	No NQC - est. data	Wind
1185	SCE	ZZZ_New Unit	240528	WDT1880QFC	0.21	4.00	W3	LA Basin	Eastern, Valley-Devers	No NQC - est. data	Wind
1186	SDG&E	BGROCK_2_BRFBX2	23416	Q1166_ES_G1	0.6	0.00	1	SD-IV			Battery
1187	SDG&E	BGROCK_2_BRFBX2	23438	Q1166_ES_G2	0.6	0.00	1	SD-IV			Battery
1188	SDG&E	BLVRDE_6_BLVBT1	22088	BOULEVRD	69	0.00	27	SD-IV			Battery
1189	SDG&E	BORDER_6_LTMCT1	22907	BD_BESS	0.69	0.00	1	SD-IV	San Diego, Border		Market
1190	SDG&E	BORDER_6_UNITA1	22149	CALPK_BD	13.8	0.00	1	SD-IV	San Diego, Border		Market
1191	SDG&E	BREGGO_6_DEGRSL	22084	BORREGO	69	0.00	6	SD-IV	San Diego	Aug NQC	Solar
1192	SDG&E	BREGGO_6_DSEBT1	22084	BORREGO	69	0.00	60	SD-IV	San Diego		Battery
1193	SDG&E	BREGGO_6_SOLAR	22082	BR GEN1	0.21	0.00	1	SD-IV	San Diego	Aug NQC	Solar
1194	SDG&E	CAMERN_6_BSPSR1	22104	CAMERON	69	0.00	78	SD-IV	San Diego	Energy Only	Solar

Attachment A - List of physical resources accounted for in the 2027 and 2031 Local Capacity Technical Studies
Physical Res. 2027 LCR

1195	SDG&E	CARLS1_2_CARCT1	22786	EA GEN1 U6	13.8	0.00	1	SD-IV	San Diego	Aug NQC	Market
1196	SDG&E	CARLS1_2_CARCT1	22787	EA GEN1 U7	13.8	0.00	1	SD-IV	San Diego	Aug NQC	Market
1197	SDG&E	CARLS1_2_CARCT1	22783	EA GEN1 U8	13.8	0.00	1	SD-IV	San Diego	Aug NQC	Market
1198	SDG&E	CARLS1_2_CARCT1	22784	EA GEN1 U9	13.8	0.00	1	SD-IV	San Diego	Aug NQC	Market
1199	SDG&E	CARLS2_1_CARCT1	22789	EA GEN1 U10	13.8	0.00	1	SD-IV	San Diego	Aug NQC	Market
1200	SDG&E	CHILLS_1_SYCENG	22120	CARLTNHS	138	0.00	1	SD-IV	San Diego	Aug NQC	QF/Selfgen
1201	SDG&E	CHILLS_7_UNITA1	22120	CARLTNHS	138	0.00	2	SD-IV	San Diego	Aug NQC	QF/Selfgen
1202	SDG&E	CLRMNT_6_CLEBT1	22136	CLAIRMNT	69	0.00	28	SD-IV	San Diego		Battery
1203	SDG&E	CNTNLA_2_SOLAR1	23401	DW GEN3 G1	0.33	0.00	1	SD-IV		Aug NQC	Solar
1204	SDG&E	CNTNLA_2_SOLAR2	23402	DW GEN3 G2	0.33	0.00	2	SD-IV		Aug NQC	Solar
1205	SDG&E	CPVERD_2_SOLAR	23309	IV GEN3 G1	0.31	0.00	1	SD-IV		Aug NQC	Solar
1206	SDG&E	CPVERD_2_SOLAR	23301	IV GEN3 G2	0.31	0.00	1	SD-IV		Aug NQC	Solar
1207	SDG&E	CRELMN_6_RAMON1	22152	CREELMAN	69	0.00	27	SD-IV	San Diego	Aug NQC	Solar
1208	SDG&E	CRELMN_6_RAMON2	22152	CREELMAN	69	0.00	27	SD-IV	San Diego	Aug NQC	Solar
1209	SDG&E	CRELMN_6_RAMSR3	22152	CREELMAN	69	0.00	35	SD-IV	San Diego	Aug NQC	Solar
1210	SDG&E	CRSTWD_6_KUMYAY	22915	KUMEYAAY	0.69	0.00	1	SD-IV	San Diego	Aug NQC	Wind
1211	SDG&E	CSLR4S_2_SOLAR	23298	DW GEN1 G1	0.32	0.00	1	SD-IV		Aug NQC	Solar
1212	SDG&E	CSLR4S_2_SOLAR	23299	DW GEN1 G2	0.32	0.00	1	SD-IV		Aug NQC	Solar
1213	SDG&E	DREWSR_2_BHSSR1	23585	DW GEN7_GEN	0.63	0.00	1	SD-IV		Aug NQC	Solar
1214	SDG&E	ELCAJN_6_EB1BT1	22208	EL CAJON	69	0.00	13	SD-IV	San Diego, El Cajon		Battery
1215	SDG&E	ELCAJN_6_LM6K	23320	EC GEN2	13.8	0.00	1	SD-IV	San Diego, El Cajon		Market
1216	SDG&E	ELCAJN_6_UNITA1	22150	EC GEN1	13.8	0.00	1	SD-IV	San Diego, El Cajon		Market
1217	SDG&E	ELLIOT_6_ELIBT1	22216	ELLIOTT	69	0.00	29	SD-IV	San Diego		Battery
1218	SDG&E	ENERSJ_2_WIND	23100	ECO GEN1 G1	0.69	0.00	G1	SD-IV		Aug NQC	Wind
1219	SDG&E	ENERSJ_5_ESJWD2	23108	ECO_GEN1G2_6	0.72	0.00	2	SD-IV		Aug NQC	Wind
1220	SDG&E	ENERSJ_5_ESJWD2	23108	ECO_GEN1G2_6	0.72	0.00	3	SD-IV		Aug NQC	Wind
1221	SDG&E	ESCNDO_6_EB1BT1	22256	ESCNDIDO	69	0.00	10	SD-IV	San Diego		Battery
1222	SDG&E	ESCNDO_6_EB2BT2	22256	ESCNDIDO	69	0.00	11	SD-IV	San Diego		Battery
1223	SDG&E	ESCNDO_6_EB3BT3	22256	ESCNDIDO	69	0.00	12	SD-IV	San Diego		Battery
1224	SDG&E	ESCNDO_6_PL1X2	22257	ES GEN	13.8	0.00	1	SD-IV	San Diego		Market
1225	SDG&E	ESCNDO_6_UNITB1	22153	CALPK_ES	13.8	0.00	1	SD-IV	San Diego		Market
1226	SDG&E	ESCO_6_GLMQF	22333	GOALLINE	13.8	0.00	1	SD-IV	San Diego	Aug NQC	Net Seller
1227	SDG&E	ESCO_6_GLMQF	22333	GOALLINE	13.8	0.00	2	SD-IV	San Diego	Aug NQC	Net Seller

Attachment A - List of physical resources accounted for in the 2027 and 2031 Local Capacity Technical Studies
Physical Res. 2027 LCR

1228	SDG&E	FALBRK_6_FESBT1	23544	AV GEN1_BESS	0.64	0.00	1	SD-IV	San Diego		Battery
1229	SDG&E	GATEWY_2_GESBT1	23710	OM GEN4_BESS	0.51	0.00	1	SD-IV	San Diego		Battery
1230	SDG&E	IVSLR2_2_SM2SR1	23441	DW GEN6	0.42	0.00	1	SD-IV		Aug NQC	Solar
1231	SDG&E	IVSLRP_2_SOLAR1	23447	DW GEN2 PV	34.5	0.00	1	SD-IV		Aug NQC	Solar
1232	SDG&E	IVWEST_2_SOLAR1	23155	DU GEN1 G1	0.2	0.00	1	SD-IV		Aug NQC	Solar
1233	SDG&E	IVWEST_2_SOLAR1	23156	DU GEN1 G2	0.2	0.00	1	SD-IV		Aug NQC	Solar
1234	SDG&E	JACMSR_1_JACSR1	23352	ECO GEN2	0.55	0.00	1	SD-IV		Aug NQC	Solar
1235	SDG&E	KEARNY_6_NESBT1	22372	KEARNY	60	0.00	25	SD-IV	San Diego	Aug NQC	Battery
1236	SDG&E	KEARNY_6_SESBT2	22372	KEARNY	60	0.00	26	SD-IV	San Diego	Aug NQC	Battery
1237	SDG&E	KYCORA_6_KMSBT1				0.00		SD-IV	San Diego	Not modeled Energy Only	Battery
1238	SDG&E	LARKSP_6_UNIT 1	22074	LRKSPBD1	13.8	0.00	1	SD-IV	San Diego, Border		Market
1239	SDG&E	LARKSP_6_UNIT 2	22075	LRKSPBD2	13.8	0.00	1	SD-IV	San Diego, Border		Market
1240	SDG&E	LAROA2_2_UNITA1	22997	INTBCT	16	0.00	1	SD-IV			Market
1241	SDG&E	LAROA2_2_UNITA1	22996	INTBST	18	0.00	1	SD-IV			Market
1242	SDG&E	LECONT_2_LESBT1	23597	DW GEN8_BESS	0.69	0.00	1	SD-IV		PCDS	Battery
1243	SDG&E	LILIAC_6_SOLAR	22404	LILIAC	69	0.00	67	SD-IV	San Diego		Solar
1244	SDG&E	MELRSE_6_MELBT1	22440	MELROSE	69	0.00	22	SD-IV	San Diego		Battery
1245	SDG&E	MELRSE_6_MELBT2	22440	MELROSE	69	0.00	23	SD-IV	San Diego		Battery
1246	SDG&E	MRGT_6_MEF2	22487	MEF MR2	13.8	0.00	1	SD-IV	San Diego		Market
1247	SDG&E	MRGT_6_MMAREF	22486	MEF MR1	13.8	0.00	1	SD-IV	San Diego		Market
1248	SDG&E	MRGT_6_TGEBT1	23412	MRGT GEN	0.64	0.00	1	SD-IV	San Diego		Battery
1249	SDG&E	MSHGTS_6_MMARLF	22448	MESAHGTS	69	0.00	1	SD-IV	San Diego	Aug NQC	Market
1250	SDG&E	MSSION_2_QF	22496	MISSION	69	0.00	1	SD-IV	San Diego	Aug NQC	Market
1251	SDG&E	MURRAY_6_UNIT				0.00		SD-IV	San Diego	Not modeled Energy Only	Market
1252	SDG&E	OCTILO_5_WIND	23314	OCO GEN G1	0.69	0.00	1	SD-IV		Aug NQC	Wind
1253	SDG&E	OCTILO_5_WIND	23318	OCO GEN G2	0.69	0.00	1	SD-IV		Aug NQC	Wind
1254	SDG&E	OGROVE_6_PL1X2	22628	PA GEN1	13.8	0.00	1	SD-IV	San Diego		Market
1255	SDG&E	OGROVE_6_PL1X2	22629	PA GEN2	13.8	0.00	1	SD-IV	San Diego		Market
1256	SDG&E	OTAY_6_PL1X2	22617	OY GEN	13.8	0.00	1	SD-IV	San Diego		Market
1257	SDG&E	OTMESA_2_PL1X3	22605	OTAYMGT1	18	0.00	1	SD-IV	San Diego		Market
1258	SDG&E	OTMESA_2_PL1X3	22606	OTAYMGT2	18	0.00	1	SD-IV	San Diego		Market
1259	SDG&E	OTMESA_2_PL1X3	22607	OTAYMST1	16	0.00	1	SD-IV	San Diego		Market

Attachment A - List of physical resources accounted for in the 2027 and 2031 Local Capacity Technical Studies
Physical Res. 2027 LCR

1260	SDG&E	PALA_6_PGCBT1	22624	PALA	69	0.00	88	SD-IV	San Diego	Waiting TPD allocation	Battery
1261	SDG&E	PALOMR_2_PL1X3	22262	PEN_CT1	18	0.00	1	SD-IV	San Diego		Market
1262	SDG&E	PALOMR_2_PL1X3	22263	PEN_CT2	18	0.00	1	SD-IV	San Diego		Market
1263	SDG&E	PALOMR_2_PL1X3	22265	PEN_ST	18	0.00	1	SD-IV	San Diego		Market
1264	SDG&E	PARDSE_6_PESBT1	22636	PARADISE	69	0.00	30	SD-IV	San Diego		Battery
1265	SDG&E	PERGRN_2_PRSBT1	23933	SG GEN 1	0.48	0.00	1	SD-IV	San Diego		Battery
1266	SDG&E	PIOPIC_2_CTG1	23162	PIO PICO CT1	13.8	0.00	1	SD-IV	San Diego		Market
1267	SDG&E	PIOPIC_2_CTG2	23163	PIO PICO CT2	13.8	0.00	1	SD-IV	San Diego		Market
1268	SDG&E	PIOPIC_2_CTG3	23164	PIO PICO CT3	13.8	0.00	1	SD-IV	San Diego		Market
1269	SDG&E	POME_6_POMBT1	23929	POM_ES	0.48	0.00	1	SD-IV	San Diego		Battery
1270	SDG&E	PRCTVY_1_MIGBT1	22672	PRCTRVLY	138	0.00	4	SD-IV	San Diego	Aug NQC	Battery
1271	SDG&E	SLRMS3_2_SRMSR1	23448	DW GEN4 G2	34.5	0.00	3	SD-IV		Aug NQC	Solar
1272	SDG&E	SLRMS3_2_SRMSR1	23456	DW GEN4 G1	34.5	0.00	4	SD-IV		Aug NQC	Solar
1273	SDG&E	SMRCOS_6_LNDFIL	22724	SANMRCOS	69	0.00	1	SD-IV	San Diego	Aug NQC	Market
1274	SDG&E	TERMEX_2_PL1X3	22982	IV GEN1 CTG2	18	0.00	1	SD-IV			Market
1275	SDG&E	TERMEX_2_PL1X3	22983	IV GEN1 CTG3	18	0.00	1	SD-IV			Market
1276	SDG&E	TERMEX_2_PL1X3	22981	IV GEN1 STG	21	0.00	1	SD-IV			Market
1277	SDG&E	TULEWD_1_TULWD1	22949	BUE GEN 1_G4	0.69	0.00	1	SD-IV		Aug NQC	Wind
1278	SDG&E	TULEWD_1_TULWD1	22942	BUE GEN 1_G1	0.69	0.00		SD-IV		Not modeled Aug NQC	Wind
1279	SDG&E	TULEWD_1_TULWD1	22945	BUE GEN 1_G2	0.69	0.00		SD-IV		Not modeled Aug NQC	Wind
1280	SDG&E	TULEWD_1_TULWD1	22947	BUE GEN 1_G3	0.69	0.00		SD-IV		Not modeled Aug NQC	Wind
1281	SDG&E	VLCNTR_6_VCEBT1	23627	VC GEN1_GEN1	34.5	0.00	1	SD-IV	San Diego		Battery
1282	SDG&E	VLCNTR_6_VCEBT1	22991	VC GEN1_GEN3	34.5	0.00	1	SD-IV	San Diego		Battery
1283	SDG&E	VLCNTR_6_VCEBT2	23628	VC GEN1_GEN2	34.5	0.00	1	SD-IV	San Diego		Battery
1284	SDG&E	VLCNTR_6_VCSLR	22870	VALCNTR	69	0.00	59	SD-IV	San Diego	Aug NQC	Solar
1285	SDG&E	VLCNTR_6_VCSLR1	22870	VALCNTR	69	0.00	28	SD-IV	San Diego	Aug NQC	Solar
1286	SDG&E	VLCNTR_6_VCSLR2	22870	VALCNTR	69	0.00	28	SD-IV	San Diego	Aug NQC	Solar
1287	SDG&E	VSTAES_6_VESBT1	23541	ME GEN 1_BS1	0.64	0.00	1	SD-IV	San Diego		Battery
1288	SDG&E	VSTAES_6_VESBT1	23216	ME GEN 1_BS2	0.48	0.00	1	SD-IV	San Diego		Battery
1289	SDG&E	WESCAN_2_BDSBT1	23421	IV GEN4 G1	0.69	0.00	1	SD-IV			Battery
1290	SDG&E	WESCN2_2_BDSBT1	23425	IV GEN6 G1	0.69	0.00	1	SD-IV			Battery
1291	SDG&E	WESCN2_2_BDSBT2	23584	Q1531 G3	0.69	0.00	1	SD-IV			Battery

1292	SDG&E	WISTRA_2_WRSSR1	23287	DW GEN5 G1	0.42	0.00	1	SD-IV		Aug NQC	Solar
1293	SDG&E	ZZ_CCRITA_7_RPPCHF	22124	CHCARITA	138	2.00	1	SD-IV	San Diego		Market
1294	SDG&E	ZZ_LAKHDG_6_UNIT 1	22625	LKHODG1	13.8	0.00	1	SD-IV	San Diego	Mothballed	Market
1295	SDG&E	ZZ_LAKHDG_6_UNIT 2	22626	LKHODG2	13.8	0.00	2	SD-IV	San Diego	Mothballed	Market
1296	SDG&E	ZZ_LAROA1_2_UNITA1	20187	LRP-U1	16	0.00	1	SD-IV		Connect to CENACE/CFE grid for the summer – not available for ISO BAA RA purpose	Market
1297	SDG&E	ZZ_SAMPSN_6_KELCO1	22700	SAMPSON	69	0.00	1	SD-IV	San Diego		Market
1298	SDG&E	ZZZ_CAMERN_6_BSPBT1	22104	CAMERON	69	0.50	79	SD-IV	San Diego	No NQC - Pmax	Battery
1299	SDG&E	ZZZ_CRELMN_6_AABBT1	22152	CREELMAN	69	0.50	77	SD-IV	San Diego	No NQC - Pmax	Battery
1300	SDG&E	ZZZ_GATEWY_2_GESBT 1	23961	OM GEN4_ES2	0.63	22.00	1	SD-IV	San Diego	No NQC - Pmax	Battery
1301	SDG&E	ZZZ_GRNITE_6_ESCBT1	22336	GRANITE	69	0.00	59	SD-IV	San Diego	Energy Only	Battery
1302	SDG&E	ZZZ_MURRAY_6_ESMBT 2	22532	MURRAY	69	0.00	83	SD-IV	San Diego	Energy Only	Battery
1303	SDG&E	ZZZ_MURRAY_6_ESMBT 3	22532	MURRAY	69	0.00	86	SD-IV	San Diego	Energy Only	Battery
1304	SDG&E	ZZZ_MURRAY_6_ESMBT 5	22532	MURRAY	69	0.00	27	SD-IV	San Diego	Energy Only	Battery
1305	SDG&E	ZZZ_New Unit	22901	PALL_BESS	0.69	0.00	1	SD-IV	San Diego	Energy Only	Battery
1306	SDG&E	ZZZ_New Unit	23231	Q1432_PV	0.39	0.00	1	SD-IV	San Diego	Energy Only	Solar
1307	SDG&E	ZZZ_New Unit	23253	Q1432_ES	0.48	17.40	1	SD-IV	San Diego	No NQC - Pmax	Battery
1308	SDG&E	ZZZ_New Unit	23685	Q1045_GEN	0.55	50.00	1	SD-IV	San Diego	No NQC - Pmax	Battery
1309	SDG&E	ZZZ_New Unit	23560	Q1047_BESS	0.55	50.00	1	SD-IV	San Diego, El Cajon	No NQC - Pmax	Battery
1310	SDG&E	ZZZ_New Unit	22962	Q1660_62_EQG	0.72	51.90	1	SD-IV		Aug NQC	Wind
1311	SDG&E	ZZZ_New Unit	23519	Q1169_GEN2	0.66	69.60	1	SD-IV	San Diego	No NQC - Pmax	Battery
1312	SDG&E	ZZZ_New Unit	22969	Q1532_GEN	34.5	90.00	1	SD-IV		No NQC - Pmax	Hybrid
1313	SDG&E	ZZZ_New Unit	23841	Q1657_GEN	0.6	100.00	1	SD-IV	San Diego	No NQC - Pmax	Battery
1314	SDG&E	ZZZ_New Unit	23959	Q1673_ES1	0.6	300.00	1	SD-IV	San Diego	No NQC - Pmax	Battery
1315	SDG&E	ZZZ_New Unit	22963	Q1660_45_EQG	0.72	51.90	2	SD-IV		Aug NQC	Wind
1316	SDG&E	ZZZ_New Unit	23871	Q1662_ES	34.5	50.00	12	SD-IV	San Diego, El Cajon	No NQC - Pmax	Battery

Attachment A - List of physical resources accounted for in the 2027 and 2031 Local Capacity Technical Studies
Physical Res. 2027 LCR

1317	SDG&E	ZZZ_New Unit	22004	ALPINE	69	0.00	48	SD-IV	San Diego	Energy Only	Battery
1318	SDG&E	ZZZ_New Unit	22004	ALPINE	69	0.00	49	SD-IV	San Diego	Energy Only	Battery
1319	SDG&E	ZZZ_New Unit	22448	MESAHGTS	69	3.00	62	SD-IV	San Diego	No NQC - Pmax	Battery
1320	SDG&E	ZZZ_New Unit	22640	PENDLETN	69	0.00	64	SD-IV	San Diego	Seeking TPD alocation	Battery
1321	SDG&E	ZZZ_New Unit	22640	PENDLETN	69	0.00	65	SD-IV	San Diego	Seeking TPD alocation	Battery
1322	SDG&E	ZZZ_New Unit	22408	LOSCOCHS	69	0.00	72	SD-IV	San Diego	Energy Only	Battery
1323	SDG&E	ZZZ_New Unit	22336	GRANITE	69	0.00	73	SD-IV	San Diego	Energy Only	Battery
1324	SDG&E	ZZZ_New Unit	22336	GRANITE	69	0.00	90	SD-IV	San Diego	Energy Only	Battery
1325	SDG&E	ZZZ_OTAY_6_ECVBT1	22604	OTAY	69	3.00	90	SD-IV	San Diego	No NQC - Pmax	Battery
1326	SDG&E	ZZZ_OTAY_6_ECVBT2	22604	OTAY	69	3.00	91	SD-IV	San Diego	No NQC - Pmax	Battery
1327	SDG&E	ZZZ_SANTEE_1_SABBT1	22734	SANTEE	138	10.00	31	SD-IV	San Diego	No NQC - Pmax	Battery

Attachment A - List of physical resources accounted for in the 2027 and 2031 Local Capacity Technical Studies

Physical Res. 2031 LCR

	PTO Area	MKT/SCHED RESOURCE ID	BUS #	BUS NAME	kV	NQC	UNIT ID	LCR AREA NAME	LCR SUB-AREA NAME	NQC Comments	CAISO Tag
1	PG&E	ALMEGT_1_UNIT 1	38118	ALMDACT1	13.8	0.00	1	Bay Area	Oakland		MUNI
2	PG&E	ALMEGT_1_UNIT 2	38119	ALMDACT2	13.8	0.00	1	Bay Area	Oakland		MUNI
3	PG&E	BANKPP_2_NSPIN	38820	DELTA A	13.2	0.00	1	Bay Area	Contra Costa	Pumps	MUNI
4	PG&E	BANKPP_2_NSPIN	38820	DELTA A	13.2	0.00	2	Bay Area	Contra Costa	Pumps	MUNI
5	PG&E	BANKPP_2_NSPIN	38820	DELTA A	13.2	0.00	3	Bay Area	Contra Costa	Pumps	MUNI
6	PG&E	BANKPP_2_NSPIN	38815	DELTA B	13.2	0.00	4	Bay Area	Contra Costa	Pumps	MUNI
7	PG&E	BANKPP_2_NSPIN	38815	DELTA B	13.2	0.00	5	Bay Area	Contra Costa	Pumps	MUNI
8	PG&E	BANKPP_2_NSPIN	38770	DELTA C	13.2	0.00	6	Bay Area	Contra Costa	Pumps	MUNI
9	PG&E	BANKPP_2_NSPIN	38770	DELTA C	13.2	0.00	7	Bay Area	Contra Costa	Pumps	MUNI
10	PG&E	BANKPP_2_NSPIN	38765	DELTA D	13.2	0.00	8	Bay Area	Contra Costa	Pumps	MUNI
11	PG&E	BANKPP_2_NSPIN	38765	DELTA D	13.2	0.00	9	Bay Area	Contra Costa	Pumps	MUNI
12	PG&E	BANKPP_2_NSPIN	38760	DELTA E	13.2	0.00	10	Bay Area	Contra Costa	Pumps	MUNI
13	PG&E	BANKPP_2_NSPIN	38760	DELTA E	13.2	0.00	11	Bay Area	Contra Costa	Pumps	MUNI
14	PG&E	BLKDIA_2_BDEBT1	365773	Q1111BES	0.69	0.00	1	Bay Area	Pittsburg		Battery
15	PG&E	BRDSLD_2_HIWIND	32172	HIGHWINDS	34.5	0.00	1	Bay Area	Contra Costa	Aug NQC	Wind
16	PG&E	BRDSLD_2_MTZUM2	32179	MONTEZUM	0.69	0.00	1	Bay Area	Contra Costa	Aug NQC	Wind
17	PG&E	BRDSLD_2_MTZUMA	32188	MONTEZUM	0.69	0.00	1	Bay Area	Contra Costa	Aug NQC	Wind
18	PG&E	BRDSLD_2_SHILO1	32181	SHILOH1W	34.5	0.00	1	Bay Area	Contra Costa	Aug NQC	Wind
19	PG&E	BRDSLD_2_SHILO2	365749	SHILOH2WIND	0.58	0.00	1	Bay Area	Contra Costa	Aug NQC	Wind
20	PG&E	BRDSLD_2_SHLO3A	32191	SHILOH3W	0.58	0.00	1	Bay Area	Contra Costa	Aug NQC	Wind
21	PG&E	BRDSLD_2_SHLO3B	32194	SHILOH4W	0.58	0.00	1	Bay Area	Contra Costa	Aug NQC	Wind
22	PG&E	CALPIN_1_AGNEW	35860	AGNEWCOG	13.8	0.00	1	Bay Area	San Jose, South Bay-Moss Landing	Aug NQC	Market
23	PG&E	CALPIN_1_AGNEW	35860	AGNEWCOG	13.8	0.00	2	Bay Area	San Jose, South Bay-Moss Landing	Aug NQC	Market
24	PG&E	CAYTNO_2_VASCO				0.00		Bay Area	Contra Costa	Not modeled Aug NQC	Market
25	PG&E	CLRMTK_1_QF				0.00		Bay Area	Oakland	Not modeled	QF/Selfgen
26	PG&E	COCOPP_2_CTG1	33188	MARSHCT1	16.4	0.00	1	Bay Area	Contra Costa	Aug NQC	Market
27	PG&E	COCOPP_2_CTG2	33189	MARSHCT2	16.4	0.00	2	Bay Area	Contra Costa	Aug NQC	Market
28	PG&E	COCOPP_2_CTG3	33190	MARSHCT3	16.4	0.00	3	Bay Area	Contra Costa	Aug NQC	Market
29	PG&E	COCOPP_2_CTG4	33191	MARSHCT4	16.4	0.00	4	Bay Area	Contra Costa	Aug NQC	Market
30	PG&E	COCOSB_6_SOLAR				0.00		Bay Area	Contra Costa	Not modeled Energy Only	Solar

Attachment A - List of physical resources accounted for in the 2027 and 2031 Local Capacity Technical Studies
Physical Res. 2031 LCR

31	PG&E	CROKET_7_UNIT	32900	CRCKTCOG	18	0.00	1	Bay Area	Pittsburg	Aug NQC	QF/Selfgen
32	PG&E	CSCGNR_1_UNIT 1	36858	Gia100	13.8	0.00	1	Bay Area	San Jose, South Bay-Moss Landing		MUNI
33	PG&E	CSCGNR_1_UNIT 2	36895	Gia200	13.8	0.00	2	Bay Area	San Jose, South Bay-Moss Landing		MUNI
34	PG&E	CUMBIA_1_SOLAR	33102	COLUMBIA	0.38	0.00	1	Bay Area	Pittsburg	Aug NQC	Solar
35	PG&E	DELTA_2_PL1X4	33108	DEC CTG1	18	0.00	1	Bay Area	Pittsburg	Aug NQC	Market
36	PG&E	DELTA_2_PL1X4	33109	DEC CTG2	18	0.00	1	Bay Area	Pittsburg	Aug NQC	Market
37	PG&E	DELTA_2_PL1X4	33110	DEC CTG3	18	0.00	1	Bay Area	Pittsburg	Aug NQC	Market
38	PG&E	DELTA_2_PL1X4	33107	DEC STG1	24	0.00	1	Bay Area	Pittsburg	Aug NQC	Market
39	PG&E	DIXNLD_1_LNDFL				0.00		Bay Area		Not modeled Aug NQC	Market
40	PG&E	DUANE_1_PL1X3	36863	DVRaGT1	13.8	0.00	1	Bay Area	San Jose, South Bay-Moss Landing		MUNI
41	PG&E	DUANE_1_PL1X3	36865	DVRaST3	13.8	0.00	1	Bay Area	San Jose, South Bay-Moss Landing		MUNI
42	PG&E	DUANE_1_PL1X3	36864	DVRbGT2	13.8	0.00	1	Bay Area	San Jose, South Bay-Moss Landing		MUNI
43	PG&E	ELKHRN_1_EESX3	366107	ELKHORNESBS1	0.51	0.00	M1	Bay Area	South Bay-Moss Landing		Battery
44	PG&E	ELKHRN_1_EESX3	366108	ELKHORNESBS2	0.51	0.00	M2	Bay Area	South Bay-Moss Landing		Battery
45	PG&E	ELKHRN_1_EESX3	366109	ELKHORNESBS3	0.51	0.00	M3	Bay Area	South Bay-Moss Landing		Battery
46	PG&E	GATWAY_2_PL1X3	33118	GATEWAY1	18	0.00	1	Bay Area	Contra Costa	Aug NQC	Market
47	PG&E	GATWAY_2_PL1X3	33119	GATEWAY2	18	0.00	1	Bay Area	Contra Costa	Aug NQC	Market
48	PG&E	GATWAY_2_PL1X3	33120	GATEWAY3	18	0.00	1	Bay Area	Contra Costa	Aug NQC	Market
49	PG&E	GILROY_1_UNIT	35850	GILROYEN	13.8	0.00	1	Bay Area	Llagas, San Jose, South Bay-Moss Landing	Aug NQC	Market
50	PG&E	GILROY_1_UNIT	35871	GILROYEN	13.8	0.00	2	Bay Area	Llagas, San Jose, South Bay-Moss Landing	Aug NQC	Market
51	PG&E	GILRPP_1_PL1X2	35851	GROYPKR1	13.8	0.00	1	Bay Area	Llagas, San Jose, South Bay-Moss Landing	Aug NQC	Market
52	PG&E	GILRPP_1_PL1X2	35852	GROYPKR2	13.8	0.00	1	Bay Area	Llagas, San Jose, South Bay-Moss Landing	Aug NQC	Market

Attachment A - List of physical resources accounted for in the 2027 and 2031 Local Capacity Technical Studies
Physical Res. 2031 LCR

53	PG&E	GILRPP_1_PL3X4	35853	GROYPKR3	13.8	0.00	1	Bay Area	Llagas, San Jose, South Bay-Moss Landing	Aug NQC	Market
54	PG&E	GRZZLY_1_BERKLY	32741	HILLSIDE_12	12.5	0.00	1	Bay Area		Aug NQC	Net Seller
55	PG&E	KELSO_2_UNITS	33813	MARIPCT1	13.8	0.00	1	Bay Area	Contra Costa	Aug NQC	Market
56	PG&E	KELSO_2_UNITS	33815	MARIPCT2	13.8	0.00	2	Bay Area	Contra Costa	Aug NQC	Market
57	PG&E	KELSO_2_UNITS	33817	MARIPCT3	13.8	0.00	3	Bay Area	Contra Costa	Aug NQC	Market
58	PG&E	KELSO_2_UNITS	33819	MARIPCT4	13.8	0.00	4	Bay Area	Contra Costa	Aug NQC	Market
59	PG&E	KIRKER_7_KELCYN				0.00		Bay Area	Pittsburg	Not modeled	Market
60	PG&E	LAWRNC_7_SUNYVL				0.00		Bay Area		Not modeled Aug NQC	Market
61	PG&E	LECEF_1_UNITS	35854	LECEFGT1	13.8	0.00	1	Bay Area	San Jose, South Bay-Moss Landing	Aug NQC	Market
62	PG&E	LECEF_1_UNITS	35855	LECEFGT2	13.8	0.00	1	Bay Area	San Jose, South Bay-Moss Landing	Aug NQC	Market
63	PG&E	LECEF_1_UNITS	35856	LECEFGT3	13.8	0.00	1	Bay Area	San Jose, South Bay-Moss Landing	Aug NQC	Market
64	PG&E	LECEF_1_UNITS	35857	LECEFGT4	13.8	0.00	1	Bay Area	San Jose, South Bay-Moss Landing	Aug NQC	Market
65	PG&E	LECEF_1_UNITS	35858	LECEFST1	13.8	0.00	1	Bay Area	San Jose, South Bay-Moss Landing		Market
66	PG&E	LMBEPK_2_UNITA1	32173	LAMBIE	13.8	0.00	1	Bay Area	Contra Costa	Aug NQC	Market
67	PG&E	LMBEPK_2_UNITA2	32174	GOOSEHAV	13.8	0.00	3	Bay Area	Contra Costa	Aug NQC	Market
68	PG&E	LMBEPK_2_UNITA3	32175	CREED	13.8	0.00	2	Bay Area	Contra Costa	Aug NQC	Market
69	PG&E	LMEC_1_PL1X3	33112	LMECCT1	18	0.00	1	Bay Area	Pittsburg	Aug NQC	Market
70	PG&E	LMEC_1_PL1X3	33111	LMECCT2	18	0.00	1	Bay Area	Pittsburg	Aug NQC	Market
71	PG&E	LMEC_1_PL1X3	33113	LMECST1	18	0.00	1	Bay Area	Pittsburg	Aug NQC	Market
72	PG&E	MARTIN_1_SUNSET				0.00		Bay Area		Not modeled Aug NQC	QF/Selfgen
73	PG&E	METEC_2_PL1X3	35881	MEC CTG1	18	0.00	1	Bay Area	South Bay-Moss Landing	Aug NQC	Market
74	PG&E	METEC_2_PL1X3	35882	MEC CTG2	18	0.00	1	Bay Area	South Bay-Moss Landing	Aug NQC	Market
75	PG&E	METEC_2_PL1X3	35883	MEC STG1	18	0.00	1	Bay Area	South Bay-Moss Landing	Aug NQC	Market
76	PG&E	MISSIX_1_QF	33250	MISSON_D4	12.5	0.00	1	Bay Area	Ames	Aug NQC	QF/Selfgen
77	PG&E	MLPTAS_7_QFUNTS				0.00		Bay Area	San Jose, South Bay-Moss Landing	Not modeled Aug NQC	QF/Selfgen

Attachment A - List of physical resources accounted for in the 2027 and 2031 Local Capacity Technical Studies
Physical Res. 2031 LCR

78	PG&E	MOSSLD_2_PSP1	36221	MLB1CTG1	18	0.00	1	Bay Area	South Bay-Moss Landing		Market
79	PG&E	MOSSLD_2_PSP1	36222	MLB1CTG2	18	0.00	1	Bay Area	South Bay-Moss Landing		Market
80	PG&E	MOSSLD_2_PSP1	36223	MLB1STG1	18	0.00	1	Bay Area	South Bay-Moss Landing		Market
81	PG&E	MOSSLD_2_PSP2	36224	MLB2CTG3	18	0.00	1	Bay Area	South Bay-Moss Landing		Market
82	PG&E	MOSSLD_2_PSP2	36225	MLB2CTG4	18	0.00	1	Bay Area	South Bay-Moss Landing		Market
83	PG&E	MOSSLD_2_PSP2	36226	MLB2STG2	18	0.00	1	Bay Area	South Bay-Moss Landing		Market
84	PG&E	NEWARK_1_QF				0.00		Bay Area		Not modeled Aug NQC	QF/Selfgen
85	PG&E	OAK C_1_EBMUD				0.00		Bay Area	Oakland	Not modeled Aug NQC	MUNI
86	PG&E	OAK C_7_UNIT 1	32901	OAKLND 1	13.8	0.00	1	Bay Area	Oakland		Market
87	PG&E	OAK C_7_UNIT 3	32903	OAKLND 3	13.8	0.00	3	Bay Area	Oakland		Market
88	PG&E	OAK L_1_GTG1				0.00		Bay Area	Oakland	Not modeled Energy Only	Market
89	PG&E	OXMTN_6_LNDFIL	33469	OX_MTN	4.16	0.00	1	Bay Area	Ames		Market
90	PG&E	OXMTN_6_LNDFIL	33469	OX_MTN	4.16	0.00	2	Bay Area	Ames		Market
91	PG&E	OXMTN_6_LNDFIL	33469	OX_MTN	4.16	0.00	3	Bay Area	Ames		Market
92	PG&E	OXMTN_6_LNDFIL	33469	OX_MTN	4.16	0.00	4	Bay Area	Ames		Market
93	PG&E	OXMTN_6_LNDFIL	33469	OX_MTN	4.16	0.00	5	Bay Area	Ames		Market
94	PG&E	OXMTN_6_LNDFIL	33469	OX_MTN	4.16	0.00	6	Bay Area	Ames		Market
95	PG&E	OXMTN_6_LNDFIL	33469	OX_MTN	4.16	0.00	7	Bay Area	Ames		Market
96	PG&E	RICHMN_1_CHVSR2				0.00		Bay Area		Not modeled Aug NQC	Solar
97	PG&E	RICHMN_1_SOLAR				0.00		Bay Area		Not modeled Aug NQC	Solar
98	PG&E	RICHMN_7_BAYENV				0.00		Bay Area		Not modeled Aug NQC	Market
99	PG&E	RUSCTY_2_UNITS	35304	RUSELCT1	15	0.00	1	Bay Area	Ames	No NQC - Pmax	Market
100	PG&E	RUSCTY_2_UNITS	35305	RUSELCT2	15	0.00	2	Bay Area	Ames	No NQC - Pmax	Market
101	PG&E	RUSCTY_2_UNITS	35306	RUSELST1	15	0.00	3	Bay Area	Ames	No NQC - Pmax	Market
102	PG&E	RUSSELL_2_SOLANO1	365566	SOLANO1W	0.69	0.00	1	Bay Area	Contra Costa	Aug NQC	Wind
103	PG&E	RUSSELL_2_SOLANO1	365574	SOLANO2W	1	0.00	2	Bay Area	Contra Costa	Aug NQC	Wind

Attachment A - List of physical resources accounted for in the 2027 and 2031 Local Capacity Technical Studies
Physical Res. 2031 LCR

104	PG&E	RUSSELL_2_SOLANO1	365600	SOLANO3W	1	0.00	3	Bay Area	Contra Costa	Aug NQC	Wind
105	PG&E	RVRVEW_1_UNITA1	33178	RVEC_GEN	13.8	0.00	1	Bay Area	Contra Costa		Market
106	PG&E	SHELRF_1_UNITS	33141	SHELL 1	12.5	0.00	1	Bay Area	Pittsburg	Aug NQC	Net Seller
107	PG&E	SHELRF_1_UNITS	33142	SHELL 2	12.5	0.00	1	Bay Area	Pittsburg	Aug NQC	Net Seller
108	PG&E	SHELRF_1_UNITS	33143	SHELL 3	12.5	0.00	1	Bay Area	Pittsburg	Aug NQC	Net Seller
109	PG&E	SRINTL_6_UNIT	33468	SRI INTL	9.11	0.00	1	Bay Area		Aug NQC	QF/Selfgen
110	PG&E	STOILS_1_UNITS	32921	CHEVGEN1	13.8	0.00	1	Bay Area	Pittsburg	Aug NQC	Market
111	PG&E	STOILS_1_UNITS	32922	CHEVGEN2	13.8	0.00	1	Bay Area	Pittsburg	Aug NQC	Market
112	PG&E	STOILS_1_UNITS	32923	CHEVGEN3	13.8	0.00	3	Bay Area	Pittsburg	Aug NQC	Market
113	PG&E	TIDWTR_2_UNITS	33151	FOSTER W	12.5	0.00	1	Bay Area	Pittsburg	Aug NQC	Net Seller
114	PG&E	TIDWTR_2_UNITS	33151	FOSTER W	12.5	0.00	2	Bay Area	Pittsburg	Aug NQC	Net Seller
115	PG&E	TIDWTR_2_UNITS	33151	FOSTER W	12.5	0.00	3	Bay Area	Pittsburg	Aug NQC	Net Seller
116	PG&E	UNOCAL_1_UNITS	32910	UNOCAL	12	0.00	1	Bay Area	Pittsburg	Aug NQC	QF/Selfgen
117	PG&E	UNOCAL_1_UNITS	32910	UNOCAL	12	0.00	2	Bay Area	Pittsburg	Aug NQC	QF/Selfgen
118	PG&E	UNOCAL_1_UNITS	32910	UNOCAL	12	0.00	3	Bay Area	Pittsburg	Aug NQC	QF/Selfgen
119	PG&E	USWNDR_2_LABWD1	365729	LABRISAWIND	0.58	0.00	1	Bay Area	Contra Costa	Aug NQC	Wind
120	PG&E	USWPFK_6_FRICK	365608	FRICKWIND	0.69	0.00	1	Bay Area	Contra Costa	Aug NQC	Wind
121	PG&E	USWPJR_2_UNITS	39233	WASCOWIND	0.69	0.00	1	Bay Area	Contra Costa	Aug NQC	Wind
122	PG&E	VISTRA_5_DALBT1	366711	DALLASBESS1	34.5	0.00	M1	Bay Area	South Bay-Moss Landing	Retired	Battery
123	PG&E	VISTRA_5_DALBT2	366712	DALLASBESS2	34.5	0.00	M2	Bay Area	South Bay-Moss Landing	Retired	Battery
124	PG&E	VISTRA_5_DALBT3	366713	DALLASBESS3	34.5	0.00	M3	Bay Area	South Bay-Moss Landing	Retired	Battery
125	PG&E	VISTRA_5_DALBT4	366715	DALLASBESS4	34.5	0.00	M4	Bay Area	South Bay-Moss Landing		Battery
126	PG&E	VISTRA_5_PLABT1	366244	PLANOBESS4	34.5	0.00	M4	Bay Area	South Bay-Moss Landing		Battery
127	PG&E	VISTRA_5_PLABT2	366243	PLANOBESS3	34.5	0.00	M3	Bay Area	South Bay-Moss Landing		Battery
128	PG&E	VISTRA_5_PLABT3	366242	PLANOBESS2	34.5	0.00	M2	Bay Area	South Bay-Moss Landing		Battery
129	PG&E	VISTRA_5_PLABT4	366241	PLANOBESS1	34.5	0.00	M1	Bay Area	South Bay-Moss Landing		Battery

Attachment A - List of physical resources accounted for in the 2027 and 2031 Local Capacity Technical Studies
Physical Res. 2031 LCR

130	PG&E	WNDMAS_2_UNIT 1	33173	BVISTAWND	0.6	0.00	1	Bay Area	Contra Costa	Aug NQC	Wind
131	PG&E	ZOND_6_UNIT				0.00		Bay Area	Contra Costa	Not modeled Aug NQC	Wind
132	PG&E	ZZ_FLOWD1_6_ALTPP1	35318	FLOWPTR	9.11	0.00	1	Bay Area	Contra Costa	No NQC - est. data	Wind
133	PG&E	ZZ_IMHOFF_1_UNIT 1	33136	CCCSD	12.5	0.00	1	Bay Area	Pittsburg	No NQC - hist. data	QF/Selfgen
134	PG&E	ZZ_MOSSLD_1_QF				0.00		Bay Area		Not modeled Aug NQC	QF/Selfgen
135	PG&E	ZZ_NA	35861	SJ-SCL W	4.3	0.00	1	Bay Area	San Jose, South Bay-Moss Landing	No NQC - hist. data	QF/Selfgen
136	PG&E	ZZ_NA	36209	SLD ENRG	12.5	0.00	1	Bay Area	South Bay-Moss Landing		QF/Selfgen
137	PG&E	ZZ_ZANKER_1_UNIT 1	35861	SJ-SCL W	4.3	0.00	RN	Bay Area	San Jose, South Bay-Moss Landing	No NQC - hist. data	QF/Selfgen
138	PG&E	ZZZ_New Unit	38921	BESS_SVP	60	0.00	1	Bay Area	San Jose, South Bay-Moss Landing	Waiting TPD allocation	Battery
139	PG&E	ZZZ_New Unit	365540	CHEVRONS	12.5	0.00	1	Bay Area		Energy Only	Market
140	PG&E	ZZZ_New Unit	365685	P66RODEO_1	12	0.00	1	Bay Area	Pittsburg	Energy Only	Market
141	PG&E	ZZZ_New Unit	366328	Q1349SPV	0.55	0.00	1	Bay Area	Contra Costa	Energy Only	Solar
142	PG&E	ZZZ_New Unit	366400	Q1457BESS	0.48	3.00	1	Bay Area	San Jose, South Bay-Moss Landing		Battery
143	PG&E	ZZZ_New Unit	365348	HOLLISTER_D1	21	10.00	1	Bay Area	South Bay-Moss Landing	No NQC - est. data	Battery
144	PG&E	ZZZ_New Unit	365342	MRGNHILL_D1	21	20.00	1	Bay Area	Llagas, San Jose, South Bay-Moss Landing	No NQC - est. data	Battery
145	PG&E	ZZZ_New Unit	366394	Q1454B	0.69	75.00	1	Bay Area	San Jose, South Bay-Moss Landing	No NQC - est. data	Battery
146	PG&E	ZZZ_New Unit	366252	Q1552BESS	0.48	250.00	1	Bay Area			Battery
147	PG&E	ZZZ_New Unit	32172	HIGHWINDS	34.5	0.00	2	Bay Area	Contra Costa	Energy Only	Wind
148	PG&E	ZZZ_New Unit	32741	HILLSIDE_12	12.5	0.00	2	Bay Area		Energy Only	Market
149	PG&E	ZZZ_New Unit	366609	OAKLANDES2	13.8	55.00	2	Bay Area	Oakland		Battery
150	PG&E	ZZZ_New Unit	366330	Q1349BESS	0.55	100.00	2	Bay Area	Contra Costa	No NQC - est. data	Battery
151	PG&E	ZZZ_New Unit	366380	SOLANO4WIND	0.72	19.74	4	Bay Area	Contra Costa	No NQC - est. data	Wind
152	PG&E	ZZZ_New Unit	92154	2154-WD	230	0.00	EW	Bay Area	Contra Costa	Energy Only	Solar
153	PG&E	ZZZ_New Unit	92296	2296-WD	230	0.00	EW	Bay Area	Contra Costa	Energy Only	Solar
154	PG&E	ZZZ_New Unit	92333	2333-WD	230	0.00	EW	Bay Area	Contra Costa	Energy Only	Solar

Attachment A - List of physical resources accounted for in the 2027 and 2031 Local Capacity Technical Studies
Physical Res. 2031 LCR

155	PG&E	ZZZ_New Unit	92597	2597-WD	115	0.00	EW	Bay Area		No NQC - est. data	Solar
156	PG&E	ZZZ_New Unit	92598	2598-WD	230	0.00	EW	Bay Area	Contra Costa	Energy Only	Solar
157	PG&E	ZZZ_New Unit	92495	2495-WD	115	10.00	FW	Bay Area	South Bay-Moss Landing	No NQC - est. data	Battery
158	PG&E	ZZZ_New Unit	365688	2509-RD-SPV	0.63	0.00	RE	Bay Area	Pittsburg	Energy Only	Solar
159	PG&E	ZZZ_New Unit	36232	CAMPEVERS_D1	21.6	0.00	RE	Bay Area	South Bay-Moss Landing	Energy Only	Solar
160	PG&E	ZZZ_New Unit	35863	CATALYST	12.5	0.00	RE	Bay Area	San Jose, South Bay-Moss Landing	Energy Only	Solar
161	PG&E	ZZZ_New Unit	33450	FACEBOOKBH	12	0.00	RE	Bay Area	Ames	Energy Only	Solar
162	PG&E	ZZZ_New Unit	365338	GRANITEROCK	4.16	0.00	RE	Bay Area	South Bay-Moss Landing	Energy Only	Solar
163	PG&E	ZZZ_New Unit	327930	SCHNITZ_D1	12.5	0.00	RE	Bay Area	Oakland	Energy Only	Solar
164	PG&E	ZZZ_New Unit	33103	TASSAJARA_D1	21.6	0.00	RE	Bay Area	Pittsburg	Energy Only	Solar
165	PG&E	ZZZ_New Unit	35307	A100US-L	12.6	0.00	RN	Bay Area		Energy Only	Market
166	PG&E	ZZZ_New Unit	35859	HGST-LV	12.4	0.00	RN	Bay Area	San Jose, South Bay-Moss Landing	Energy Only	Market
167	PG&E	ZZZ_New Unit	32741	HILLSIDE_12	12.5	0.00	RN	Bay Area		Energy Only	Market
168	PG&E	ZZZ_New Unit	35302	NUMMI-LV	12.6	0.00	RN	Bay Area		Energy Only	Market
169	PG&E	ZZZ_New Unit	365559	STANFORD	12.5	0.00	RN	Bay Area	South Bay-Moss Landing	Energy Only	Market
170	PG&E	ADERA_1_SOLAR1	34319	ADERASLR	0.48	0.00	1	Fresno	Panoche 115 kV, Wilson 115 kV	Energy Only	Solar
171	PG&E	ADMEST_6_SOLAR	34315	ADAMS_E	12.5	0.00	1	Fresno			Solar
172	PG&E	AGRICO_6_PL3N5	34608	AGRICO	13.8	0.00	3	Fresno			Market
173	PG&E	AGRICO_7_UNIT	34608	AGRICO	13.8	0.00	2	Fresno			Market
174	PG&E	AGRICO_7_UNIT	34608	AGRICO	13.8	0.00	4	Fresno			Market
175	PG&E	AKINGS_6_AMESR1	34688	AMRCNKNG	0.36	0.00	1	Fresno		Aug NQC	Solar
176	PG&E	AVENAL_6_AVPARK	34265	AVENAL P	12	0.00	1	Fresno	Coalinga	Aug NQC	Solar
177	PG&E	AVENAL_6_AVSLR1	346912	AVENAPSPV1	0.39	0.00	1	Fresno	Coalinga	Energy Only	Solar
178	PG&E	AVENAL_6_AVSLR2	346914	AVENAPSPV2	0.39	0.00	2	Fresno	Coalinga	Energy Only	Solar
179	PG&E	AVENAL_6_SANDDG	34263	SANDDRAG	12	0.00	1	Fresno	Coalinga	Aug NQC	Solar
180	PG&E	AVENAL_6_SUNCTY	34257	SUNCTY D	12	0.00	1	Fresno	Coalinga	Aug NQC	Solar
181	PG&E	BALCHS_7_UNIT 1	34624	BALCH 1	13.2	0.00	1	Fresno	Herndon	Aug NQC	Market
182	PG&E	BALCHS_7_UNIT 2	34612	BLCH 2-3	13.8	0.00	1	Fresno	Herndon	Aug NQC	Market
183	PG&E	BALCHS_7_UNIT 3	34614	BLCH 2-3	13.8	0.00	1	Fresno	Herndon	Aug NQC	Market

Attachment A - List of physical resources accounted for in the 2027 and 2031 Local Capacity Technical Studies
Physical Res. 2031 LCR

184	PG&E	CABALO_2_M2BSR1	365524	MUSTANG4	0.36	0.00	2	Fresno		Aug NQC	Solar
185	PG&E	CABALO_2_M2WSR2	365523	MUSTANG3	0.36	0.00	1	Fresno		Aug NQC	Solar
186	PG&E	CANTUA_1_SOLAR	34349	CANTUA_D	12.5	0.00	1	Fresno	Panoche 115 kV	Aug NQC	Solar
187	PG&E	CANTUA_1_SOLAR	34349	CANTUA_D	12.5	0.00	2	Fresno	Panoche 115 kV	Aug NQC	Solar
188	PG&E	CHEVCO_6_UNIT 1	34652	CHV.COAL	9.11	0.00	1	Fresno	Coalinga, Panoche 115 kV	Aug NQC	QF/Selfgen
189	PG&E	CHEVCO_6_UNIT 2	34652	CHV.COAL	9.11	0.00	2	Fresno	Coalinga, Panoche 115 kV	Aug NQC	QF/Selfgen
190	PG&E	CHWCHL_1_AVSSR1				0.00		Fresno	Panoche 115 kV, Wilson 115 kV	Not Modeled Energy Only	Solar
191	PG&E	CHWCHL_1_AVSSR2				0.00		Fresno	Panoche 115 kV, Wilson 115 kV	Not Modeled Energy Only	Solar
192	PG&E	CHWCHL_1_UNIT	34301	CHOWCOGN	13.8	0.00	1	Fresno	Panoche 115 kV, Wilson 115 kV		Market
193	PG&E	CORCAN_1_SOLAR1	34692	CORCORAN_D4	12.5	0.00	1	Fresno	Herndon, Hanford	Aug NQC	Solar
194	PG&E	CORCAN_1_SOLAR2	346906	CORCORAN2SPV	0.36	0.00	1	Fresno	Herndon, Hanford	Aug NQC	Solar
195	PG&E	CRESSY_1_PARKER				0.00		Fresno		Not modeled Aug NQC	MUNI
196	PG&E	CRNEVL_6_CRNVA	34634	CRANEVLY	12	0.00	1	Fresno	Borden	Aug NQC	Market
197	PG&E	CRNEVL_6_SJQN 2	34631	SJ2GEN	9.11	0.00	1	Fresno	Borden	Aug NQC	Market
198	PG&E	CURTIS_1_CANLCK				0.00		Fresno		Not modeled Aug NQC	Market
199	PG&E	CURTIS_1_FARFLD				0.00		Fresno		Not modeled Aug NQC	Market
200	PG&E	DAIRLD_1_MD1SL1				0.00		Fresno	Herndon, Panoche 115 kV, Wilson 115 kV	Not modeled Energy Only	Solar
201	PG&E	DAIRLD_1_MD2BM1				0.00		Fresno	Herndon, Panoche 115 kV, Wilson 115 kV	Not modeled Energy Only	Market
202	PG&E	EEKTMN_6_SOLAR1	34629	KETTLEMN	0.8	0.00	1	Fresno		Energy Only	Solar
203	PG&E	ELCAP_1_SOLAR				0.00		Fresno		Not Modeled Aug NQC	Solar
204	PG&E	ELNIDO_1_ECRSR1	92799	2799-WD	115	0.00	EW	Fresno	Panoche 115 kV	Energy Only	Solar
205	PG&E	EXCHEC_7_UNIT 1	34306	EXCHQUER	13.8	0.00	1	Fresno	Panoche 115 kV, Wilson 115 kV	Aug NQC	MUNI
206	PG&E	EXCLSG_1_SOLAR	34623	EXCLSRSL	0.5	0.00	1	Fresno	Panoche 115 kV	Aug NQC	Solar
207	PG&E	FRESHW_1_SOLAR1	34699	FRSHWTRSLR	0.39	0.00	1	Fresno	Herndon, Hanford	Energy Only	Solar
208	PG&E	FRIANT_6_UNITS	34636	FRIANTDAM	6.6	0.00	2	Fresno	Borden	Aug NQC	Net Seller
209	PG&E	FRIANT_6_UNITS	34636	FRIANTDAM	6.6	0.00	3	Fresno	Borden	Aug NQC	Net Seller

Attachment A - List of physical resources accounted for in the 2027 and 2031 Local Capacity Technical Studies
Physical Res. 2031 LCR

210	PG&E	FRIANT_6_UNITS	34636	FRIANTDAM	6.6	0.00	4	Fresno	Borden	Aug NQC	Net Seller
211	PG&E	GIFENS_6_BUGSL1	34644	BRFRDGFNSPV	0.55	0.00	1	Fresno		Aug NQC	Solar
212	PG&E	GIFFEN_6_SOLAR	34467	GIFFEN_DIST	12.5	0.00	1	Fresno		Aug NQC	Solar
213	PG&E	GIFFEN_6_SOLAR1				0.00		Fresno		Not modeled Energy Only	Solar
214	PG&E	GUERNS_6_HD3BM3				0.00		Fresno		Not modeled Energy Only	Market
215	PG&E	GUERNS_6_SOLAR	34463	GUERNSEY_D2	12.5	0.00	5	Fresno		Aug NQC	Solar
216	PG&E	GUERNS_6_SOLAR	34461	GUERNSEY_D1	12.5	0.00	8	Fresno		Aug NQC	Solar
217	PG&E	GUERNS_6_VH2BM1				0.00		Fresno		Not modeled Energy Only	Market
218	PG&E	GWFPWR_1_HPPBT1	365188	HANFORDHBES	0.69	0.00	1	Fresno	Herndon, Hanford		Battery
219	PG&E	GWFPWR_1_LDCTG1	34431	HANFORDPPCT1	13.8	0.00	1	Fresno	Herndon, Hanford		Market
220	PG&E	GWFPWR_1_LDCTG2	34433	HANFORDPPCT2	13.8	0.00	1	Fresno	Herndon, Hanford		Market
221	PG&E	GWFPWR_1_LEDBT1	365767	Q1713BESS	0.69	0.00	1	Fresno	Herndon, Hanford		Battery
222	PG&E	HAASPH_7_PL1X2	34610	HAAS	13.8	0.00	1	Fresno	Herndon	Aug NQC	Market
223	PG&E	HAASPH_7_PL1X2	34610	HAAS	13.8	0.00	2	Fresno	Herndon	Aug NQC	Market
224	PG&E	HARDWK_6_STWBM1				0.00		Fresno		Not modeled Energy Only	Market
225	PG&E	HELMPG_7_UNIT 1	34600	HELMS	18	0.00	1	Fresno		Aug NQC	Market
226	PG&E	HELMPG_7_UNIT 2	34602	HELMS	18	0.00	2	Fresno		Aug NQC	Market
227	PG&E	HELMPG_7_UNIT 3	34604	HELMS	18	0.00	3	Fresno		Aug NQC	Market
228	PG&E	HENRTA_6_ACDSR3	92796	2796-WD	230	0.00	EW	Fresno		Energy Only	Solar
229	PG&E	HENRTA_6_ELCTG1	34539	GWF_GT1	13.8	0.00	1	Fresno			Market
230	PG&E	HENRTA_6_ELCTG2	34541	GWF_GT2	13.8	0.00	1	Fresno			Market
231	PG&E	HENRTA_6_HDEBT1	365115	HENRTADESBS	0.55	0.00	1	Fresno			Battery
232	PG&E	HENRTA_6_SOLAR1				0.00		Fresno		Not modeled Aug NQC	Solar
233	PG&E	HENRTA_6_SOLAR2				0.00		Fresno		Not modeled Energy Only	Solar
234	PG&E	HENRTS_1_SOLAR	34617	HNRTASOLARPV	0.39	0.00	1	Fresno	Herndon, Hanford	Aug NQC	Solar
235	PG&E	HURON_6_SOLAR	34557	HURON_DI	12.5	0.00	1	Fresno	Coalinga, Panoche 115 kV	Aug NQC	Solar
236	PG&E	HURON_6_SOLAR	34557	HURON_DI	12.5	0.00	2	Fresno	Coalinga, Panoche 115 kV	Aug NQC	Solar
237	PG&E	JAVASR_1_JAVSR1	34649	JAVASLRSPV	0.6	0.00	1	Fresno	Herndon, Hanford	Aug NQC	Solar

Attachment A - List of physical resources accounted for in the 2027 and 2031 Local Capacity Technical Studies
Physical Res. 2031 LCR

238	PG&E	JAYNE_6_WLSLR	34639	WESTLNDS	0.48	0.00	1	Fresno	Coalinga	Energy Only	Solar
239	PG&E	KANSAS_6_SOLAR	34666	KANSASS_S	12.5	0.00	F	Fresno		Energy Only	Solar
240	PG&E	KERKH2_7_UNIT 1	34308	KERCKHOF	13.8	0.00	1	Fresno	Herndon, Wilson 115 kV	Aug NQC	Market
241	PG&E	KERMAN_6_SOLAR1				0.00		Fresno		Not modeled Energy Only	Solar
242	PG&E	KERMAN_6_SOLAR2				0.00		Fresno		Not modeled Energy Only	Solar
243	PG&E	KERNEY_6_FCSSR1	34668	KEARNEY_D1	12.5	0.00	1	Fresno		Energy Only	Solar
244	PG&E	KINGCO_1_KINGBR	34642	KINGSBUR	13.8	0.00	1	Fresno	Herndon, Hanford	Aug NQC	Net Seller
245	PG&E	KINGCO_1_KINGBR	34642	KINGSBUR	13.8	0.00	2	Fresno	Herndon, Hanford	Aug NQC	Net Seller
246	PG&E	KINGRV_7_UNIT 1	34616	KINGSRIV	13.8	0.00	1	Fresno	Herndon, Reedley	Aug NQC	Market
247	PG&E	KNGBRG_1_KBSLR1				0.00		Fresno		Not modeled Energy Only	Solar
248	PG&E	KNGBRG_1_KBSLR2				0.00		Fresno		Not modeled Energy Only	Solar
249	PG&E	KNTSTH_6_SOLAR	34694	KENT_S	0.8	0.00	1	Fresno		Energy Only	Solar
250	PG&E	KNTSTH_6_WALSR1	365679	WSTALMONDSPV	0.63	0.00	1	Fresno		Energy Only	Solar
251	PG&E	LEPRFD_1_KANSAS	346802	KANSASSLRPV	0.69	0.00	1	Fresno	Herndon, Hanford	Aug NQC	Solar
252	PG&E	LOTUS_6_LSFSR1	34335	LOTUSSFS	0.32	0.00	1	Fresno	Borden	Aug NQC	Solar
253	PG&E	LTBEAR_1_LB3SR3	365663	LILBEAR3SPV	0.55	0.00	1	Fresno	Panoche 115 kV, Wilson 115 kV	Aug NQC	Solar
254	PG&E	LTBEAR_1_LB4SR4	365673	LILBEAR4SPV	34.5	0.00	1	Fresno	Panoche 115 kV, Wilson 115 kV	Aug NQC	Solar
255	PG&E	LTBEAR_1_LB4SR5	365675	LILBEAR5SPV	34.5	0.00	1	Fresno	Panoche 115 kV, Wilson 115 kV	Aug NQC	Solar
256	PG&E	LTBERA_1_LB1SR1	365604	LILBEAR1SPV	0.55	0.00	1	Fresno	Panoche 115 kV, Wilson 115 kV	Aug NQC	Solar
257	PG&E	LUNAVL_2_LVSSR1	365740	Q1129SBDC1	34.5	0.00	1	Fresno		Aug NQC	Solar
258	PG&E	LUNAVL_2_LVSSR2	365740	Q1129SBDC1	34.5	0.00	1	Fresno		Aug NQC	Solar
259	PG&E	LUNAVL_2_LVSSR3	367628	Q1129SBDC2	34.5	0.00	1	Fresno		Aug NQC	Solar
260	PG&E	MALAGA_1_AUCTG1	34671	KRCDPCT1	13.8	0.00	1	Fresno	Herndon		Market
261	PG&E	MALAGA_1_AUCTG2	34672	KRCDPCT2	13.8	0.00	1	Fresno	Herndon		Market
262	PG&E	MCCALL_1_QF				0.00		Fresno	Herndon	Not modeled Aug NQC	QF/Selfgen
263	PG&E	MCSWAN_6_UNITS	34320	MCSWAIN	9.11	0.00	1	Fresno	Panoche 115 kV, Wilson 115 kV	Aug NQC	MUNI

Attachment A - List of physical resources accounted for in the 2027 and 2031 Local Capacity Technical Studies
Physical Res. 2031 LCR

264	PG&E	MENBIO_6_RENEW1	34339	CALRENEW	12.5	0.00	1	Fresno	Panoche 115 kV, Wilson 115 kV	Aug NQC	Net Seller
265	PG&E	MERCED_1_SOLAR1				0.00		Fresno		Not modeled Energy Only	Solar
266	PG&E	MERCED_1_SOLAR2				0.00		Fresno		Not modeled Energy Only	Solar
267	PG&E	MERCFL_6_UNIT	34322	MERCEDFL	9.11	0.00	1	Fresno	Panoche 115 kV, Wilson 115 kV	Aug NQC	Market
268	PG&E	MNDOTA_1_SOLAR1	34313	NORTHSTA	0.2	0.00	1	Fresno	Panoche 115 kV, Wilson 115 kV	Aug NQC	Solar
269	PG&E	MNDOTA_1_SOLAR2				0.00		Fresno	Panoche 115 kV, Wilson 115 kV	Not modeled Energy Only	Solar
270	PG&E	MSTANG_2_MTGBT1	34685	MUSTANGBES	0.8	0.00	2	Fresno			Battery
271	PG&E	MSTANG_2_SOLAR	34683	REMUSTANGSPV	0.36	0.00	1	Fresno		Aug NQC	Solar
272	PG&E	MSTANG_2_SOLAR3	34683	REMUSTANGSPV	0.36	0.00	1	Fresno		Aug NQC	Solar
273	PG&E	MSTANG_2_SOLAR4	34683	REMUSTANGSPV	0.36	0.00	1	Fresno		Aug NQC	Solar
274	PG&E	ONLLPP_6_UNITS	34316	ONEILPMP	9.11	0.00	1	Fresno		Aug NQC	MUNI
275	PG&E	OROLOM_1_SOLAR1	346892	OROLOMA1SPV	0.39	0.00	1	Fresno	Panoche 115 kV	Energy Only	Solar
276	PG&E	OROLOM_1_SOLAR2	34689	OROLOMA_D3	12.5	0.00	2	Fresno	Panoche 115 kV	Energy Only	Solar
277	PG&E	ORTGA_6_ME1SL1				0.00		Fresno		Not modeled Aug NQC	Solar
278	PG&E	PAIGES_6_SOLAR	34653	PAIGESLR	0.55	0.00	1	Fresno	Coalinga, Panoche 115 kV	Energy Only	Solar
279	PG&E	PINFLT_7_UNITS	38720	PINEFLAT	13.8	0.00	1	Fresno	Herndon	Aug NQC	MUNI
280	PG&E	PINFLT_7_UNITS	38720	PINEFLAT	13.8	0.00	2	Fresno	Herndon	Aug NQC	MUNI
281	PG&E	PINFLT_7_UNITS	38720	PINEFLAT	13.8	0.00	3	Fresno	Herndon	Aug NQC	MUNI
282	PG&E	PNCHPP_1_PL1X2	34328	STRWDPNC	13.8	0.00	1	Fresno	Panoche 115 kV		Market
283	PG&E	PNCHPP_1_PL1X2	34329	STRWDPNC	13.8	0.00	2	Fresno	Panoche 115 kV		Market
284	PG&E	PNOCHE_1_PL1X2	34142	WHD_PAN2	13.8	0.00	1	Fresno	Panoche 115 kV		Market
285	PG&E	PNOCHE_1_UNITA1	34186	CALPEAKP	13.8	0.00	1	Fresno	Panoche 115 kV		Market
286	PG&E	REEDLY_6_SOLAR				0.00		Fresno	Herndon, Reedley	Not modeled Energy Only	Solar
287	PG&E	S_RITA_6_SOLAR1				0.00		Fresno		Not modeled Energy Only	Solar
288	PG&E	SCARLT_2_SS2BT1	365240	Q1135BESS3	0.69	0.00	3	Fresno			Battery
289	PG&E	SCARLT_2_SS2SR1				0.00		Fresno			Solar

Attachment A - List of physical resources accounted for in the 2027 and 2031 Local Capacity Technical Studies
Physical Res. 2031 LCR

290	PG&E	SCARLT_2_SSABT1	365225	Q1135BESS1	34.5	0.00	1	Fresno			Battery
291	PG&E	SCARLT_2_SSASR1	365226	Q1135SPV1	34.5	0.00	1	Fresno		Aug NQC	Solar
292	PG&E	SCARLT_2_SSBBT1	365227	Q1135BESS2	34.5	0.00	2	Fresno			Battery
293	PG&E	SCARLT_2_SSBSR1	365230	Q1135SPV2	0.6	0.00	2	Fresno		Aug NQC	Solar
294	PG&E	SCHNDR_1_FIVPTS	34353	SCHINDLER_D	12.5	0.00	1	Fresno	Panoche 115 kV	Aug NQC	Solar
295	PG&E	SCHNDR_1_FIVPTS	34353	SCHINDLER_D	12.5	0.00	2	Fresno	Panoche 115 kV	Aug NQC	Solar
296	PG&E	SCHNDR_1_WSTSDE	34353	SCHINDLER_D	12.5	0.00	3	Fresno	Panoche 115 kV	Aug NQC	Solar
297	PG&E	SCHNDR_1_WSTSDE	34353	SCHINDLER_D	12.5	0.00	4	Fresno	Panoche 115 kV	Aug NQC	Solar
298	PG&E	SGREGY_6_SANGER	34646	SANGERCG1	13.8	0.00	1	Fresno	Herndon	Aug NQC	Market
299	PG&E	SGREGY_6_SANGER	34646	SANGERCG2	13.8	0.00	2	Fresno	Herndon	Aug NQC	Market
300	PG&E	SLATE_2_SLASR1	365694	SLATESPV1	0.65	0.00	1	Fresno		Aug NQC	Hybrid
301	PG&E	SLATE_2_SLASR2	365695	SLATEBESS1	0.66	0.00	2	Fresno		Aug NQC	Hybrid
302	PG&E	SLATE_2_SLASR3				0.00		Fresno		Not modeled Aug NQC	Hybrid
303	PG&E	SLATE_2_SLASR4	365698	SLATESPV2	0.65	0.00	3	Fresno		Aug NQC	Hybrid
304	PG&E	SLATE_2_SLASR5	365699	SLATEBESS2	0.66	0.00	4	Fresno		Aug NQC	Hybrid
305	PG&E	STOREY_2_MDRCH2				0.00		Fresno		Not modeled Aug NQC	Market
306	PG&E	STOREY_2_MDRCH3				0.00		Fresno		Not modeled Aug NQC	Market
307	PG&E	STOREY_2_MDRCH4				0.00		Fresno		Not modeled Aug NQC	Market
308	PG&E	STOREY_7_MDRCHW	34209	STOREY D	12.5	0.00	1	Fresno		Aug NQC	Net Seller
309	PG&E	STROUD_6_SOLAR	34563	STROUD_D	12.5	0.00	1	Fresno		Aug NQC	Solar
310	PG&E	STROUD_6_SOLAR	34563	STROUD_D	12.5	0.00	2	Fresno		Aug NQC	Solar
311	PG&E	STROUD_6_WWHSR1				0.00		Fresno		Not modeled Energy Only	Solar
312	PG&E	SUMWHT_6_SWSSR1	365504	SUMMERWHTSPV	0.6	0.00	1	Fresno		Aug NQC	Solar
313	PG&E	TRNQL8_2_AMASR1	365514	TRNQAMRSPV	0.55	0.00	1	Fresno		Aug NQC	Solar
314	PG&E	TRNQL8_2_AZUSR1	365517	TRNQAZLSPV	0.55	0.00	2	Fresno		Aug NQC	Solar
315	PG&E	TRNQL8_2_ROJSR1	365520	TRNQRJOSPV	0.55	0.00	3	Fresno		Aug NQC	Solar
316	PG&E	TRNQL8_2_VERSR1	365526	TRNQVRDSPV	0.55	0.00	4	Fresno		Aug NQC	Solar
317	PG&E	TRNQLT_2_RETBT1	34444	RETRQLTYBES1	0.53	0.00	1	Fresno			Battery
318	PG&E	TRNQLT_2_RETBT1	365332	RETRQLTYBES2	0.53	0.00	2	Fresno			Battery
319	PG&E	TRNQLT_2_SOLAR	34340	TRANQLTYSPV1	0.42	0.00	1	Fresno		Aug NQC	Solar
320	PG&E	TRNQLT_2_SOLAR	365330	TRANQLTYSPV2	0.42	0.00	2	Fresno		Aug NQC	Solar

Attachment A - List of physical resources accounted for in the 2027 and 2031 Local Capacity Technical Studies
Physical Res. 2031 LCR

321	PG&E	TVYVLY_6_KRSHY1				0.00		Fresno		Not modeled Aug NQC	Market
322	PG&E	ULTPFR_1_UNIT 1	34640	RIOBRVOF	12.5	0.00	1	Fresno	Herndon	Aug NQC	Market
323	PG&E	VEGA_6_SOLAR1	34314	VEGA	34.5	0.00	1	Fresno		Energy Only	Solar
324	PG&E	WAUKNA_1_SOLAR	365180	CRCRNSLRSPV	0.36	0.00	1	Fresno	Herndon, Hanford	Aug NQC	Solar
325	PG&E	WAUKNA_1_SOLAR2	34677	CORCORAN2SPV	0.41	0.00	1	Fresno	Herndon, Hanford	No NQC - Pmax	Solar
326	PG&E	WFRESN_1_SOLAR				0.00		Fresno		Not modeled Energy Only	Solar
327	PG&E	WHITNY_6_SOLAR	34673	WHTNYPTSPV	0.55	0.00	1	Fresno	Coalinga, Panoche 115 kV	Energy Only	Solar
328	PG&E	WISHON_6_UNITS	34658	WISHON	2.3	0.00	1	Fresno	Borden	Aug NQC	Market
329	PG&E	WISHON_6_UNITS	34658	WISHON	2.3	0.00	2	Fresno	Borden	Aug NQC	Market
330	PG&E	WISHON_6_UNITS	34658	WISHON	2.3	0.00	3	Fresno	Borden	Aug NQC	Market
331	PG&E	WISHON_6_UNITS	34658	WISHON	2.3	0.00	4	Fresno	Borden	Aug NQC	Market
332	PG&E	WISHON_6_UNITS	34658	WISHON	2.3	0.00	SJ	Fresno	Borden	Aug NQC	Market
333	PG&E	WOODWR_1_HYDRO				0.00		Fresno	Herndon	Not modeled Energy Only	Market
334	PG&E	ZZ_BORDEN_2_QF	34253	BORDEN D	12.5	0.00	QF	Fresno		No NQC - hist. data	Net Seller
335	PG&E	ZZ_BULLRD_7_SAGNES	34213	BULLD 12	12.5	0.00	1	Fresno	Herndon	Aug NQC	QF/Selfgen
336	PG&E	ZZ_CHWCHL_1_BIOMAS	34305	CHWCHLA2	13.8	0.00	1	Fresno	Panoche 115 kV, Wilson 115 kV	Aug NQC	Market
337	PG&E	ZZ_DINUBA_6_UNIT	34648	DINUBA E	13.8	0.00	MB	Fresno	Herndon, Reedley	Mothballed	Market
338	PG&E	ZZ_ELNIDP_6_BIOMAS	34330	ELNIDOBM	13.8	0.00	1	Fresno	Panoche 115 kV, Wilson 115 kV	Aug NQC	Market
339	PG&E	ZZ_HENRTA_6_UNITA1	365336	ELECTROLYTB1	0.69	0.00	3	Fresno		Energy Only	Battery
340	PG&E	ZZ_HENRTA_6_UNITA1	365337	ELECTROLYTB2	0.69	0.00	4	Fresno		Energy Only	Battery
341	PG&E	ZZ_INTTRB_6_UNIT	34342	INT.TURB	9.11	0.00	1	Fresno		Repowering	Market
342	PG&E	ZZ_KERKH1_7_UNIT 2	34343	KERCK1-2	6.6	0.00	MB	Fresno	Herndon, Wilson 115 kV	No NQC - hist. data	Market
343	PG&E	ZZ_MALAGA_1_ACDBX2	365709	ACIDBESS1	0.69	0.00	1	Fresno	Herndon	Energy Only	Battery
344	PG&E	ZZ_MALAGA_1_ACDBX2	365711	ACIDBESS2	0.69	0.00	1	Fresno	Herndon	Energy Only	Battery
345	PG&E	ZZ_NA	34485	FRESNOWW	12.5	0.00	RE	Fresno		No NQC - hist. data	QF/Selfgen

Attachment A - List of physical resources accounted for in the 2027 and 2031 Local Capacity Technical Studies
Physical Res. 2031 LCR

346	PG&E	ZZ_NA	34651	JACALITO	0.55	0.00	RE	Fresno	Coalinga	Energy Only	Market
347	PG&E	ZZ_WRGHTP_7_AMENGY	34207	WRIGHT D	12.5	0.00	QF	Fresno			QF/Selfgen
348	PG&E	ZZZ_New Unit	365504	SUMMERWHTSPV	0.6	2.34	1	Fresno		No NQC - est. data	Solar
349	PG&E	ZZZ_New Unit	366340	Q1378WIND	0.75	15.32	1	Fresno		No NQC - est. data	Wind
350	PG&E	ZZZ_New Unit	365746	Q1718WIND	0.75	18.38	1	Fresno		No NQC - est. data	Wind
351	PG&E	ZZZ_New Unit	365740	Q1129SBDC	34.5	138.50	1	Fresno		No NQC - est. data	Battery
352	PG&E	ZZZ_New Unit	366004	Q1391SPV	0.6	0.00	2	Fresno		Energy Only	Solar
353	PG&E	ZZZ_New Unit	365747	Q1718BESS	0.9	54.94	2	Fresno		No NQC - est. data	Battery
354	PG&E	ZZZ_New Unit	366005	Q1391BESS	0.6	184.00	2	Fresno		No NQC - est. data	Battery
355	PG&E	ZZZ_New Unit	365325	MUSTANGSPV3	0.36	3.70	3	Fresno		No NQC - est. data	Solar
356	PG&E	ZZZ_New Unit	365327	MUSTANGSPV4	0.36	4.10	4	Fresno		No NQC - est. data	Solar
357	PG&E	ZZZ_New Unit	365706	FSNOCGNBESS2	0.69	16.40	5	Fresno	Herndon	No NQC - est. data	Battery
358	PG&E	ZZZ_New Unit	92080	2080-WD	115	0.00	EW	Fresno	Herndon, Reedley	Energy Only	Solar
359	PG&E	ZZZ_New Unit	92226	2226-WD	115	0.00	EW	Fresno	Panoche 115 kV	Energy Only	Solar
360	PG&E	ZZZ_New Unit	92649	2649-WD	70	0.00	EW	Fresno		Energy Only	Solar
361	PG&E	ZZZ_New Unit	93057	3057-WD	115	0.00	EW	Fresno	Panoche 115 kV	Energy Only	Solar
362	PG&E	ZZZ_New Unit	92142	2142-WD	70	0.08	FW	Fresno		No NQC - est. data	Solar
363	PG&E	ZZZ_New Unit	92484	2484-WD	21	9.90	FW	Fresno	Coalinga	No NQC - est. data	Battery
364	PG&E	ZZZ_New Unit	342400	GLASS_D1	12.5	0.00	RE	Fresno		Energy Only	Solar
365	PG&E	ZZZ_New Unit	367633	SESWTF	4.16	0.00	RE	Fresno	Herndon	Energy Only	Solar
366	PG&E	ZZZ_New Unit	342671	TOMATEK	12	0.00	RE	Fresno	Panoche 115 kV, Wilson 115 kV	Energy Only	Hybrid
367	PG&E	ZZZ_New Unit	92007	2007-RD	70	0.00	RN	Fresno	Borden	Energy Only	Market
368	PG&E	ZZZ_New Unit	365340	LEPRINOFDLMR	21	0.00	RN	Fresno	Herndon, Hanford	Energy Only	Market
369	PG&E	ZZZ_New Unit	34603	JGBSWLT	12.5	0.00	ST	Fresno	Herndon, Hanford	Energy Only	Market
370	PG&E	ZZZZ_New Unit	365857	13C1728SPV	0.63	0.00	1	Fresno		Energy Only	Solar
371	PG&E	ZZZZ_New Unit	365847	Q1709SPV	0.63	0.00	1	Fresno		Energy Only	Solar

Attachment A - List of physical resources accounted for in the 2027 and 2031 Local Capacity Technical Studies
Physical Res. 2031 LCR

372	PG&E	ZZZZ_New Unit	365848	Q1709BESS	0.63	35.00	2	Fresno		No NQC - est. data	Battery
373	PG&E	ZZZZ_New Unit	365858	13C1728BESS	0.63	75.00	2	Fresno		No NQC - est. data	Battery
374	PG&E	BRDGVL_7_BAKER				0.00		Humboldt		Not modeled Aug NQC	Net Seller
375	PG&E	FTSWRD_6_TRFORK				0.00		Humboldt		Not modeled Aug NQC	Market
376	PG&E	FTSWRD_7_QFUNTS				0.00		Humboldt		Not modeled Aug NQC	QF/Selfgen
377	PG&E	HUMBPP_1_UNITS3	31180	HMBOBAYPPB	13.8	0.00	4	Humboldt			Market
378	PG&E	HUMBPP_1_UNITS3	31180	HMBOBAYPPB	13.8	0.00	5	Humboldt			Market
379	PG&E	HUMBPP_1_UNITS3	31180	HMBOBAYPPB	13.8	0.00	6	Humboldt			Market
380	PG&E	HUMBPP_1_UNITS3	31180	HMBOBAYPPB	13.8	0.00	7	Humboldt			Market
381	PG&E	HUMBPP_6_UNITS	31181	HMBOBAYPPA	13.8	0.00	1	Humboldt			Market
382	PG&E	HUMBPP_6_UNITS	31181	HMBOBAYPPA	13.8	0.00	2	Humboldt			Market
383	PG&E	HUMBPP_6_UNITS	31181	HMBOBAYPPA	13.8	0.00	3	Humboldt			Market
384	PG&E	HUMBPP_6_UNITS	31182	HMBOBAYPPC	13.8	0.00	8	Humboldt			Market
385	PG&E	HUMBPP_6_UNITS	31182	HMBOBAYPPC	13.8	0.00	9	Humboldt			Market
386	PG&E	HUMBPP_6_UNITS	31182	HMBOBAYPPC	13.8	0.00	10	Humboldt			Market
387	PG&E	KEKAWK_6_UNIT	31166	KEKAWAKACRK	4.16	0.00	1	Humboldt		Aug NQC	Net Seller
388	PG&E	PACLUM_6_UNIT	31152	HRCGENSAB	13.8	0.00	1	Humboldt		Aug NQC	Net Seller
389	PG&E	PACLUM_6_UNIT	31152	HRCGENSAB	13.8	0.00	2	Humboldt		Aug NQC	Net Seller
390	PG&E	PACLUM_6_UNIT	31153	HRCGENC	2.4	0.00	3	Humboldt		Aug NQC	Net Seller
391	PG&E	ZZ_ARCATA_6_FCPSB1	31072	ARCATA	60	0.00	1	Humboldt		Energy Only	Solar
392	PG&E	ZZ_BLULKE_6_BLUELK	31156	BLUELKPP	12.5	0.00	MB	Humboldt		Mothballed	Market
393	PG&E	ZZ_FAIRHV_6_UNIT	31150	FAIRHAVN	13.8	0.00	1	Humboldt		No NQC - hist. data	Net Seller
394	PG&E	ZZ_LAPAC_6_UNIT	31158	LP SAMOA	12.5	0.00	1	Humboldt			Market
395	PG&E	ZZZ_2399-WD	31080	HUMBOLDT	60	0.00	1	Humboldt		Energy Only	Solar
396	PG&E	ZZZ_2400-WD	31080	HUMBOLDT	60	0.00	2	Humboldt		Energy Only	Solar
397	PG&E	ZZZ_3258-WD	31072	ARCATA	60	0.00	2	Humboldt		Energy Only	Solar
398	PG&E	ZZZ_New Unit	399997	FAIRHAVEN ES	60	0.00	EW	Humboldt		Energy Only	Battery
399	PG&E	7STDRD_1_SOLAR1	35065	7STNDRD_D1	21.6	0.00	1	Kern	South Kern PP, Kern Oil	Aug NQC	Solar
400	PG&E	BDGRCK_1_UNITS	35029	BADGERCK	13.8	0.00	1	Kern	South Kern PP	Aug NQC	Net Seller

Attachment A - List of physical resources accounted for in the 2027 and 2031 Local Capacity Technical Studies
Physical Res. 2031 LCR

401	PG&E	BEARMT_1_UNIT	35066	PSE-BEAR	13.8	0.00	1	Kern	South Kern PP, Westpark	Aug NQC	Net Seller
402	PG&E	BKRFLD_2_SOLAR1				0.00		Kern	South Kern PP	Not modeled Aug NQC	Solar
403	PG&E	DEXZEL_1_UNIT	35024	DEXZEL	13.8	0.00	1	Kern	South Kern PP, Kern Oil	Aug NQC	Net Seller
404	PG&E	DISCOV_1_CHEVRN	35062	DISCOVRY	13.8	0.00	1	Kern	South Kern PP, Kern Oil	Aug NQC	QF/Selfgen
405	PG&E	DOUBLC_1_UNITS	35023	DOUBLE C	13.8	0.00	1	Kern	South Kern PP	Aug NQC	Net Seller
406	PG&E	DOUBLC_1_UNITS	35023	DOUBLE C	13.8	0.00	2	Kern	South Kern PP	Aug NQC	Net Seller
407	PG&E	KERNFT_1_UNITS	35026	KERNFRNT	13.8	0.00	1	Kern	South Kern PP	Aug NQC	Net Seller
408	PG&E	KERNFT_1_UNITS	35026	KERNFRNT	13.8	0.00	2	Kern	South Kern PP	Aug NQC	Net Seller
409	PG&E	LAMONT_1_SOLAR1	35019	REGULUS	0.4	0.00	1	Kern	South Kern PP, Kern PWR-Tevis	Aug NQC	Solar
410	PG&E	LAMONT_1_SOLAR2	35092	REDWOODSPV	0.6	0.00	4	Kern	South Kern PP, Kern PWR-Tevis	Aug NQC	Solar
411	PG&E	LAMONT_1_SOLAR3	35087	WOODMERESPV	0.4	0.00	1	Kern	South Kern PP, Kern PWR-Tevis	Aug NQC	Solar
412	PG&E	LAMONT_1_SOLAR4	35059	HAYWORTHSPV	0.4	0.00	1	Kern	South Kern PP, Kern PWR-Tevis	Aug NQC	Solar
413	PG&E	LAMONT_1_SOLAR5	35054	REDCRESTSPV	0.4	0.00	1	Kern	South Kern PP, Kern PWR-Tevis	Aug NQC	Solar
414	PG&E	LIVOAK_1_UNIT 1	35058	PSE-LVOK	9.1	0.00	1	Kern	South Kern PP, Kern Oil	Aug NQC	Net Seller
415	PG&E	MAGUND_1_BKISR1				0.00		Kern	South Kern PP, Kern Oil	Not modeled Aug NQC	Solar
416	PG&E	MAGUND_1_BKSSR2				0.00		Kern	South Kern PP, Kern Oil	Not modeled Aug NQC	Solar
417	PG&E	MTNPOS_1_UNIT	35036	MT POSO	13.8	0.00	1	Kern	South Kern PP, Kern Oil	Aug NQC	Net Seller
418	PG&E	OLDRIV_6_BIOGAS				0.00		Kern	South Kern PP, Kern 70 kV	Not modeled Aug NQC	Market
419	PG&E	OLDRIV_6_CESDBM				0.00		Kern	South Kern PP, Kern 70 kV	Not modeled Aug NQC	Market
420	PG&E	OLDRIV_6_LKVBM1				0.00		Kern	South Kern PP, Kern 70 kV	Not modeled Aug NQC	Market
421	PG&E	OLDRV1_6_SOLAR	35091	OLDRIVER1SPV	0.69	0.00	1	Kern	South Kern PP, Kern 70 kV	Aug NQC	Solar
422	PG&E	SIERRA_1_UNITS	35027	HISIERRA	13.8	0.00	1	Kern	South Kern PP	Aug NQC	Market
423	PG&E	SIERRA_1_UNITS	35027	HISIERRA	13.8	0.00	2	Kern	South Kern PP	Aug NQC	Market

Attachment A - List of physical resources accounted for in the 2027 and 2031 Local Capacity Technical Studies
Physical Res. 2031 LCR

424	PG&E	SKERN_6_SOLAR1	35089	S_KERN	0.48	0.00	1	Kern	South Kern PP, Kern 70 kV	Aug NQC	Solar
425	PG&E	SKERN_6_SOLAR2	365563	SKICSPV	0.4	0.00	1	Kern	South Kern PP, Kern 70 kV	Aug NQC	Solar
426	PG&E	VEDDER_1_SEKERN	35046	SEKR	9.11	0.00	1	Kern	South Kern PP, Kern Oil	Aug NQC	QF/Selfgen
427	PG&E	ZZZ_New Unit	91783	1783-WD	0.65	0.00	EW	Kern	South Kern PP, Kern PWR-Tevis	Energy Only	Solar
428	PG&E	ZZZ_New Unit	366955	2446-RD-SPV	0.65	0.00	RE	Kern	South Kern PP, Kern Oil	Energy Only	Solar
429	PG&E	ZZZ_New Unit	35068	EANDB_D1	12.5	0.00	RE	Kern	South Kern PP	Energy Only	Solar
430	PG&E	ZZZ_New Unit	348120	VEDDER_D1	12.5	0.00	RE	Kern	South Kern PP, Kern Oil	Energy Only	Solar
431	PG&E	ADLIN_1_UNITS	31435	AIDLINGYSR1	13.8	0.00	1	NCNB	Eagle Rock, Fulton		Market
432	PG&E	ADLIN_1_UNITS	31437	AIDLINGYSR2	13.8	0.00	2	NCNB	Eagle Rock, Fulton		Market
433	PG&E	BERCYN_2_BCEBT1	39185	Q1097	0.4	0.00	1	NCNB	Fulton		Battery
434	PG&E	CLOVDL_1_SOLAR				0.00		NCNB	Eagle Rock, Fulton	Not modeled Aug NQC	Solar
435	PG&E	FULTON_1_QF				0.00		NCNB	Fulton	Not modeled Aug NQC	QF/Selfgen
436	PG&E	GEYS11_7_UNIT11	31412	GEYSER11	13.8	0.00	1	NCNB	Eagle Rock, Fulton		Market
437	PG&E	GEYS12_7_UNIT12	31414	GEYSER12	13.8	0.00	1	NCNB	Fulton		Market
438	PG&E	GEYS13_7_UNIT13	31416	GEYSER13	13.8	0.00	1	NCNB			Market
439	PG&E	GEYS14_7_UNIT14	31418	GEYSER14	13.8	0.00	1	NCNB	Fulton		Market
440	PG&E	GEYS16_7_UNIT16	31420	GEYSER16	13.8	0.00	1	NCNB	Fulton		Market
441	PG&E	GEYS17_7_UNIT17	31422	GEYSER17	13.8	0.00	1	NCNB	Fulton		Market
442	PG&E	GEYS18_7_UNIT18	31424	GEYSER18	13.8	0.00	1	NCNB			Market
443	PG&E	GEYS20_7_UNIT20	31426	GEYSER20	13.8	0.00	1	NCNB			Market
444	PG&E	GYS5X6_7_UNITS	31406	GEYSR5-6	13.8	0.00	1	NCNB	Eagle Rock, Fulton		Market
445	PG&E	GYS5X6_7_UNITS	31406	GEYSR5-6	13.8	0.00	2	NCNB	Eagle Rock, Fulton		Market
446	PG&E	GYS7X8_7_UNITS	31408	GEYSER78	13.8	0.00	1	NCNB	Eagle Rock, Fulton		Market
447	PG&E	GYS7X8_7_UNITS	31408	GEYSER78	13.8	0.00	2	NCNB	Eagle Rock, Fulton		Market
448	PG&E	GYSRVL_7_WSPRNG				0.00		NCNB	Fulton	Not modeled Aug NQC	QF/Selfgen
449	PG&E	HILAND_7_YOLOWD				0.00		NCNB	Eagle Rock, Fulton	Not Modeled. Energy Only	Market
450	PG&E	IGNACO_1_QF				0.00		NCNB		Not modeled Aug NQC	QF/Selfgen
451	PG&E	INDVLY_1_UNITS	31436	INDIANVLPH	4.16	0.00	1	NCNB	Eagle Rock, Fulton	Aug NQC	Net Seller

Attachment A - List of physical resources accounted for in the 2027 and 2031 Local Capacity Technical Studies
Physical Res. 2031 LCR

452	PG&E	INDVLY_1_UNITS	31436	INDIANVLPH	4.16	0.00	2	NCNB	Eagle Rock, Fulton	Aug NQC	Net Seller
453	PG&E	MONTPH_7_UNITS	32700	MONTICLO	9.1	0.00	1	NCNB	Fulton	Aug NQC	Market
454	PG&E	MONTPH_7_UNITS	32700	MONTICLO	9.1	0.00	2	NCNB	Fulton	Aug NQC	Market
455	PG&E	MONTPH_7_UNITS	32700	MONTICLO	9.1	0.00	3	NCNB	Fulton	Aug NQC	Market
456	PG&E	NCPA_7_GP1UN1	38106	NCPA1GY1	13.8	0.00	1	NCNB		Aug NQC	MUNI
457	PG&E	NCPA_7_GP1UN2	38108	NCPA1GY2	13.8	0.00	1	NCNB		Aug NQC	MUNI
458	PG&E	NCPA_7_GP2UN3	38110	NCPA2GY1	13.8	0.00	1	NCNB	Fulton	Aug NQC	MUNI
459	PG&E	NCPA_7_GP2UN4	38112	NCPA2GY2	13.8	0.00	1	NCNB	Fulton	Aug NQC	MUNI
460	PG&E	NOVATO_6_LNDFL				0.00		NCNB		Not modeled Aug NQC	Market
461	PG&E	SANTFG_7_UNITS	31400	SANTAFESTG1	13.8	0.00	1	NCNB			Market
462	PG&E	SANTFG_7_UNITS	31401	SANTAFESTG2	13.8	0.00	2	NCNB			Market
463	PG&E	SMUDGO_7_UNIT 1	31430	SONOMAPPGEO	13.8	0.00	1	NCNB			Market
464	PG&E	SNMALF_6_UNITS	31446	SONOMA LDFL1	4.16	0.00	1	NCNB	Fulton	Aug NQC	QF/Selfgen
465	PG&E	SNMALF_6_UNITS	31446	SONOMA LDFL1	4.16	0.00	2	NCNB	Fulton	Aug NQC	QF/Selfgen
466	PG&E	SNMALF_6_UNITS	31446	SONOMA LDFL1	4.16	0.00	3	NCNB	Fulton	Aug NQC	QF/Selfgen
467	PG&E	SNMALF_6_UNITS	31446	SONOMA LDFL1	4.16	0.00	4	NCNB	Fulton	Aug NQC	QF/Selfgen
468	PG&E	SNMALF_6_UNITS	31447	SONOMA LDFL2	4.16	0.00	5	NCNB	Fulton	Aug NQC	QF/Selfgen
469	PG&E	SNMALF_6_UNITS	31447	SONOMA LDFL2	4.16	0.00	6	NCNB	Fulton	Aug NQC	QF/Selfgen
470	PG&E	SNMALF_6_UNITS	31447	SONOMA LDFL2	4.16	0.00	7	NCNB	Fulton	Aug NQC	QF/Selfgen
471	PG&E	SNMALF_6_UNITS	31447	SONOMA LDFL2	4.16	0.00	8	NCNB	Fulton	Aug NQC	QF/Selfgen
472	PG&E	SNMALF_6_UNITS	31447	SONOMA LDFL2	4.16	0.00	9	NCNB	Fulton	Aug NQC	QF/Selfgen
473	PG&E	UKIAH_7_LAKEMN	38020	CITY UKH	115	0.00	1	NCNB	Eagle Rock, Fulton	Aug NQC	MUNI
474	PG&E	UKIAH_7_LAKEMN	38020	CITY UKH	115	0.00	2	NCNB	Eagle Rock, Fulton	Aug NQC	MUNI
475	PG&E	WDFRDF_2_WFFBT1	366344	WSTFRDFLTRES	0.4	0.00	1	NCNB	Fulton		Battery
476	PG&E	ZZ_GEYS17_2_BOTRCK	31421	BOTTLERK	13.8	0.00	1	NCNB	Fulton	Energy Only and Mothballed	Market
477	PG&E	ZZ_POTTER_7_VECINO				0.00		NCNB	Eagle Rock, Fulton	Not modeled Aug NQC	QF/Selfgen

Attachment A - List of physical resources accounted for in the 2027 and 2031 Local Capacity Technical Studies
Physical Res. 2031 LCR

478	PG&E	ZZZ_New Unit	367338	Q1859G	12.5	53.00	1	NCNB	Eagle Rock, Fulton	No NQC - est. data	Market
479	PG&E	ZZZ_New Unit	92287	2287-WD	60	0.00	EW	NCNB		Energy Only	Solar
480	PG&E	ZZZ_New Unit	92365	2365-WD	60	0.00	EW	NCNB	Fulton	Energy Only	Solar
481	PG&E	ZZZ_New Unit	92606	2606-WD	115	0.00	EW	NCNB		Energy Only	Battery
482	PG&E	ZZZZ_New Unit	367508	Q1838BESS1	34.5	0.00	1	NCNB		No NQC - est. data	Battery
483	PG&E	ZZZZ_New Unit	367509	Q1838BESS2	34.5	0.00	2	NCNB		No NQC - est. data	Battery
484	PG&E	ZZZZ_New Unit	367510	Q1838BESS3	34.5	0.00	3	NCNB		No NQC - est. data	Battery
485	PG&E	ALLGNY_6_HYDRO1				0.00		Sierra		Not modeled Aug NQC	Market
486	PG&E	APLHIL_1_SFKHY1				0.00		Sierra	South of Rio Oso	Not modeled Energy Only	Market
487	PG&E	BELDEN_7_UNIT 1	31784	BELDEN	13.8	0.00	1	Sierra		Aug NQC	Market
488	PG&E	BIOMAS_1_UNIT 1	32156	WOODLAND	13.8	0.00	1	Sierra		Aug NQC	Net Seller
489	PG&E	BNNIEN_7_ALTAPH				0.00		Sierra	Placer, Gold Hill-Drum, South of Rio Oso	Not modeled Aug NQC	Market
490	PG&E	BOGUE_1_UNITA1	32451	FREC	13.8	0.00	1	Sierra		Aug NQC	Market
491	PG&E	BOWMN_6_HYDRO	32480	BOWMAN	9.11	0.00	1	Sierra		Aug NQC	MUNI
492	PG&E	BUCKCK_2_HYDRO				0.00		Sierra		Not modeled Aug NQC	Market
493	PG&E	BUCKCK_7_OAKFLT				0.00		Sierra		Not modeled Aug NQC	Market
494	PG&E	BUCKCK_7_PL1X2	31820	BCKS CRK	11	0.00	1	Sierra		Aug NQC	Market
495	PG&E	BUCKCK_7_PL1X2	31820	BCKS CRK	11	0.00	2	Sierra		Aug NQC	Market
496	PG&E	CAMPFW_7_FARWST	32470	CMP.FARW	9.11	0.00	1	Sierra		Aug NQC	MUNI
497	PG&E	CHICPK_7_UNIT 1	32462	CHI.PARK	11.5	0.00	1	Sierra	Placer, Gold Hill-Drum, South of Rio Oso	Aug NQC	MUNI
498	PG&E	COLGAT_7_UNIT 1	32450	COLGATE1	13.8	0.00	1	Sierra		Aug NQC	MUNI
499	PG&E	COLGAT_7_UNIT 2	32452	COLGATE2	13.8	0.00	1	Sierra		Aug NQC	MUNI
500	PG&E	CRESTA_7_PL1X2	31812	CRESTA	11.5	0.00	1	Sierra		Aug NQC	Market
501	PG&E	CRESTA_7_PL1X2	31812	CRESTA	11.5	0.00	2	Sierra		Aug NQC	Market
502	PG&E	DAVIS_1_SOLAR1				0.00		Sierra		Not modeled Energy Only	Solar
503	PG&E	DAVIS_1_SOLAR2				0.00		Sierra		Not modeled Aug NQC	Solar

Attachment A - List of physical resources accounted for in the 2027 and 2031 Local Capacity Technical Studies
Physical Res. 2031 LCR

504	PG&E	DAVIS_7_MNMETH				0.00		Sierra		Not modeled Aug NQC	Market
505	PG&E	DEADCK_1_UNIT	31862	DEADWOOD	9.11	0.00	1	Sierra		Aug NQC	MUNI
506	PG&E	DEERCR_6_UNIT 1	32474	DEER CRK	2.4	0.00	1	Sierra		Aug NQC	Market
507	PG&E	DRUM_7_PL1X2	32504	DRUMPHU1U2	6.6	0.00	1	Sierra		Aug NQC	Market
508	PG&E	DRUM_7_PL1X2	32504	DRUMPHU1U2	6.6	0.00	2	Sierra		Aug NQC	Market
509	PG&E	DRUM_7_PL3X4	32506	DRUMPHU3U4	6.6	0.00	3	Sierra		Aug NQC	Market
510	PG&E	DRUM_7_PL3X4	32506	DRUMPHU3U4	6.6	0.00	4	Sierra		Aug NQC	Market
511	PG&E	DRUM_7_UNIT 5	32454	DRUM 5	13.8	0.00	1	Sierra		Aug NQC	Market
512	PG&E	DUTCH1_7_UNIT 1	32464	DTCHFLT1	11	0.00	1	Sierra	Placer, Gold Hill-Drum, South of Rio Oso	Aug NQC	Market
513	PG&E	DUTCH2_7_UNIT 1	32502	DTCHFLT2	6.9	0.00	1	Sierra		Aug NQC	MUNI
514	PG&E	ELDORO_7_UNIT 1	32513	ELDRADO1	21.6	0.00	1	Sierra	Gold Hill-Drum, South of Rio Oso		Market
515	PG&E	ELDORO_7_UNIT 2	32514	ELDRADO2	21.6	0.00	1	Sierra	Gold Hill-Drum, South of Rio Oso		Market
516	PG&E	FMEADO_6_HELLHL	32486	HELLHOLE	9.11	0.00	1	Sierra	South of Rio Oso	Aug NQC	MUNI
517	PG&E	FMEADO_7_UNIT	32508	FRNCH MD	4.2	0.00	1	Sierra	South of Rio Oso	Aug NQC	MUNI
518	PG&E	FORBST_7_UNIT 1	31814	FORBSTWN	11.5	0.00	1	Sierra		Aug NQC	MUNI
519	PG&E	GRIDLY_6_SOLAR	38054	GRIDLEY	60	0.00	1	Sierra	Pease	Energy Only	Solar
520	PG&E	GRIZLY_1_UNIT 1	31900	GRIZZLYG	6.9	0.00	1	Sierra		Aug NQC	MUNI
521	PG&E	GRNLF2_1_UNIT	32492	GRNLEAF2	13.8	0.00	1	Sierra	Pease	Aug NQC	QF/Selfgen
522	PG&E	HALSEY_6_UNIT	32478	HALSEY F	6.6	0.00	1	Sierra	Placer, Gold Hill-Drum, South of Rio Oso	Aug NQC	Market
523	PG&E	HAYPRS_6_HAYHD1	32488	HAYPRESSLWR	3.14	0.00	1	Sierra		Aug NQC	Market
524	PG&E	HAYPRS_6_HAYHD2	32489	HAYPRESSUPR	3.14	0.00	1	Sierra		Aug NQC	Market
525	PG&E	HIGGNS_1_COMBIE				0.00		Sierra	South of Rio Oso	Not modeled Aug NQC	Market
526	PG&E	KELYRG_6_UNIT	31834	KELLYRDG	4.16	0.00	1	Sierra		Aug NQC	MUNI
527	PG&E	LIVEOK_6_SOLAR				0.00		Sierra	Pease	Not modeled Aug NQC	Solar
528	PG&E	LODIEC_2_PL1X2	38123	LODIECCT	18	0.00	1	Sierra	South of Rio Oso		MUNI
529	PG&E	LODIEC_2_PL1X2	38124	LODIECST	18	0.00	1	Sierra	South of Rio Oso		MUNI
530	PG&E	MDFKRL_2_PROJCT	32456	MIDLFORK	13.8	0.00	1	Sierra	South of Rio Oso	Aug NQC	MUNI
531	PG&E	MDFKRL_2_PROJCT	32458	RALSTON	13.8	0.00	1	Sierra	South of Rio Oso	Aug NQC	MUNI
532	PG&E	MDFKRL_2_PROJCT	32456	MIDLFORK	13.8	0.00	2	Sierra	South of Rio Oso	Aug NQC	MUNI

Attachment A - List of physical resources accounted for in the 2027 and 2031 Local Capacity Technical Studies
Physical Res. 2031 LCR

533	PG&E	NAROW1_2_UNIT	32466	NARROWS1	11	0.00	1	Sierra		Aug NQC	Market
534	PG&E	NAROW2_2_UNIT	32468	NARROWSPH2	13.8	0.00	1	Sierra		Aug NQC	MUNI
535	PG&E	NWCSTL_7_UNIT 1	32460	NEWCSTLE	13.2	0.00	1	Sierra	Placer, Gold Hill-Drum, South of Rio Oso	Aug NQC	Market
536	PG&E	OROVIL_6_UNIT	31888	OROVLENRG	4.16	0.00	1	Sierra		Aug NQC	Market
537	PG&E	OXBOW_6_DRUM	32484	OXBOW F	9.11	0.00	1	Sierra		Aug NQC	MUNI
538	PG&E	PEASE_1_TBEBT1	91902	1902-WD	115	0.00	FW	Sierra	Pease		Battery
539	PG&E	PLACVL_1_CHILIB				0.00		Sierra	Gold Hill-Drum, South of Rio Oso	Not modeled Aug NQC	Market
540	PG&E	PLACVL_1_RCKCRE				0.00		Sierra	South of Rio Oso	Not modeled Aug NQC	Market
541	PG&E	PLSNTG_7_LNCLND				0.00		Sierra	South of Rio Oso	Not modeled Aug NQC	Market
542	PG&E	POEPH_7_UNIT 1	31790	POE 1	13.8	0.00	1	Sierra		Aug NQC	Market
543	PG&E	POEPH_7_UNIT 2	31792	POE 2	13.8	0.00	1	Sierra		Aug NQC	Market
544	PG&E	RCKCRK_7_UNIT 1	31786	ROCK CK1	13.8	0.00	1	Sierra		Aug NQC	Market
545	PG&E	RCKCRK_7_UNIT 2	31788	ROCK CK2	13.8	0.00	1	Sierra		Aug NQC	Market
546	PG&E	RIOOSO_1_QF				0.00		Sierra		Not modeled Aug NQC	QF/Selfgen
547	PG&E	ROLLIN_6_UNIT	32476	ROLLINSF	6.6	0.00	1	Sierra		Aug NQC	MUNI
548	PG&E	SLYCRK_1_UNIT 1	31832	SLY.CR.	6.6	0.00	1	Sierra		Aug NQC	MUNI
549	PG&E	SPAULD_6_UNIT 3	32472	SPAULDG	9.11	0.00	3	Sierra		Aug NQC	Market
550	PG&E	SPAULD_6_UNIT12	32472	SPAULDG	9.11	0.00	1	Sierra		Aug NQC	Market
551	PG&E	SPAULD_6_UNIT12	32472	SPAULDG	9.11	0.00	2	Sierra		Aug NQC	Market
552	PG&E	SPI LI_2_UNIT 1	32498	SPILINCF	12.5	0.00	1	Sierra	South of Rio Oso	Aug NQC	Net Seller
553	PG&E	STIGCT_2_LODI	38114	STIG CC	13.8	0.00	1	Sierra	South of Rio Oso		MUNI
554	PG&E	ULTRCK_2_UNIT	32500	RBROCKLI	12.5	0.00	1	Sierra	South of Rio Oso	Aug NQC	Market
555	PG&E	WDLEAF_7_UNIT 1	31794	WOODLEAF	13.8	0.00	1	Sierra		Aug NQC	MUNI
556	PG&E	WHEATL_6_LNDFIL				0.00		Sierra		Not modeled Aug NQC	Market
557	PG&E	WISE_1_UNIT 1	325120	WISEPH	6.6	0.00	1	Sierra	Placer, Gold Hill-Drum, South of Rio Oso	Aug NQC	Market
558	PG&E	WISE_1_UNIT 2	325120	WISEPH	6.6	0.00	1	Sierra	Placer, Gold Hill-Drum, South of Rio Oso	Aug NQC	Market
559	PG&E	YUBACT_1_SUNSWT	32494	YUBACITY	13.8	0.00	1	Sierra	Pease	Aug NQC	Net Seller
560	PG&E	YUBACT_6_UNITA1	32496	YCEC	13.8	0.00	1	Sierra	Pease		Market
561	PG&E	ZZ_NA	32162	RIV.DLTA	9.11	0.00	1	Sierra		No NQC - hist. data	QF/Selfgen

Attachment A - List of physical resources accounted for in the 2027 and 2031 Local Capacity Technical Studies
Physical Res. 2031 LCR

562	PG&E	ZZ_UCDAVS_1_UNIT	32166	UC DAVIS	9.11	0.30	RN	Sierra		No NQC - hist. data	QF/Selfgen
563	PG&E	BEARDS_7_UNIT 1	34074	BEARDSLY	6.9	0.00	1	Stockton	Tesla-Bellota, Stanislaus	Aug NQC	MUNI
564	PG&E	CAMCHE_1_PL1X3	33850	CAMANCHE	4.2	0.00	1	Stockton	Tesla-Bellota	Aug NQC	MUNI
565	PG&E	CAMCHE_1_PL1X3	33850	CAMANCHE	4.2	0.00	2	Stockton	Tesla-Bellota	Aug NQC	MUNI
566	PG&E	CAMCHE_1_PL1X3	33850	CAMANCHE	4.2	0.00	3	Stockton	Tesla-Bellota	Aug NQC	MUNI
567	PG&E	CENT40_1_C40SR1	365683	Q1103SPV	0.32	0.00	1	Stockton	Tesla-Bellota	Aug NQC	Solar
568	PG&E	CRWCKS_1_SOLAR1	34053	CRWCRKSLR1G	0.8	0.00	1	Stockton	Tesla-Bellota	Energy Only	Solar
569	PG&E	DONNLS_7_UNIT	34058	DONNELLS	13.8	0.00	1	Stockton	Tesla-Bellota, Stanislaus	Aug NQC	MUNI
570	PG&E	FROGTN_1_UTICAA				0.00		Stockton	Tesla-Bellota, Stanislaus	Not Modeled Aug NQC	Market
571	PG&E	FROGTN_1_UTICAM				0.00		Stockton	Tesla-Bellota, Stanislaus	Not Modeled Aug NQC	Market
572	PG&E	LOCKFD_1_BEARCK				0.00		Stockton	Tesla-Bellota	Not Modeled Aug NQC	Solar
573	PG&E	LOCKFD_1_KSOLAR				0.00		Stockton	Tesla-Bellota	Not Modeled Aug NQC	Solar
574	PG&E	LODI25_2_UNIT 1	38120	LODI25CT	13.8	0.00	1	Stockton	Lockeford		MUNI
575	PG&E	MANTEC_1_ML1SR1				0.00		Stockton	Tesla-Bellota	Not modeled Energy Only	Solar
576	PG&E	NORCNV_1_NCVBT1	365141	Q1109BESS	34.5	0.00	1	Stockton	Tesla-Bellota		Battery
577	PG&E	PALSEL_6_PLSBT1	366966	Q1350BESS	34.5	0.00	1	Stockton	Tesla-Bellota		Battery
578	PG&E	PALSEL_6_PLSSR1	366130	Q1350SPV1	34.5	0.00	1	Stockton	Tesla-Bellota	Aug NQC	Solar
579	PG&E	PALSEL_6_PLSSR1	366131	Q1350SPV2	34.5	0.00	1	Stockton	Tesla-Bellota	Aug NQC	Solar
580	PG&E	PEORIA_1_SOLAR				0.00		Stockton	Tesla-Bellota, Stanislaus	Not modeled Aug NQC	Solar
581	PG&E	PHOENX_1_UNIT				0.00		Stockton	Tesla-Bellota, Stanislaus	Not modeled Aug NQC	Market
582	PG&E	SCHLTE_1_PL1X3	33805	GWFTRCY1	13.8	0.00	1	Stockton	Tesla-Bellota		Market
583	PG&E	SCHLTE_1_PL1X3	33807	GWFTRCY2	13.8	0.00	1	Stockton	Tesla-Bellota		Market
584	PG&E	SCHLTE_1_PL1X3	33811	GWFTRCY3	13.8	0.00	1	Stockton	Tesla-Bellota		Market
585	PG&E	SMPRIP_1_SMPSON	33810	RIPONCOGEN	13.8	46.05	1	Stockton	Tesla-Bellota	Aug NQC	Market
586	PG&E	SNDBAR_7_UNIT 1	34060	SANDBAR	13.8	0.00	1	Stockton	Tesla-Bellota, Stanislaus	Aug NQC	MUNI
587	PG&E	SPIFBD_1_PL1X2	34055	SPISONORA	13.8	0.00	1	Stockton	Tesla-Bellota, Stanislaus	Aug NQC	Market

Attachment A - List of physical resources accounted for in the 2027 and 2031 Local Capacity Technical Studies
Physical Res. 2031 LCR

588	PG&E	SPRGAP_1_UNIT 1	34078	SPRNGGAPPH	6.6	0.00	1	Stockton	Tesla-Bellota, Stanislaus	Aug NQC	Market
589	PG&E	STANIS_7_UNIT 1	34062	STANISLAUSPH	13.8	0.00	1	Stockton	Tesla-Bellota, Stanislaus	Aug NQC	Market
590	PG&E	TULLCK_7_UNITS	34076	TULLOCH	6.9	0.00	1	Stockton	Tesla-Bellota	Aug NQC	MUNI
591	PG&E	TULLCK_7_UNITS	34076	TULLOCH	6.9	0.00	2	Stockton	Tesla-Bellota	Aug NQC	MUNI
592	PG&E	TULLCK_7_UNITS	34076	TULLOCH	6.9	0.00	3	Stockton	Tesla-Bellota	Aug NQC	MUNI
593	PG&E	ULTPCH_1_UCSBT1	365769	Q1116BESS	0.55	0.00	2	Stockton	Tesla-Bellota, Stanislaus	No NQC - est. data	Battery
594	PG&E	ULTPCH_1_UNIT 1	34050	CHINESESTA	12.5	0.00	1	Stockton	Tesla-Bellota, Stanislaus	Aug NQC	Market
595	PG&E	VLYHOM_7_SSJID				0.00		Stockton	Tesla-Bellota, Stanislaus	Not modeled Aug NQC	MUNI
596	PG&E	ZZZ_New Unit	365556	SAFEWAYB	12.5	0.00	RN	Stockton	Tesla-Bellota	Energy Only	Market
597	PG&E	ZZZ_New Unit	365558	TESLAMTR	12.5	0.00	RN	Stockton	Tesla-Bellota	Energy Only	Market
598	PG&E	ZZZZ_New Unit	365703	Q1690BESS	0.48	92.00	1	Stockton	Tesla-Bellota	No NQC - est. data	Battery
599	SCE	ACACIA_6_SOLAR	29878	ACACIA_G	0.48	0.00	1	BC/Ventura		Aug NQC	Solar
600	SCE	ALAMO_6_UNIT	25653	ALAMO SC	13.8	0.00	1	BC/Ventura		Aug NQC	MUNI
601	SCE	BGSKYN_2_AS2SR1	29773	ANT2_EXP2_G	0.63	0.00	1	BC/Ventura		Aug NQC	Solar
602	SCE	BGSKYN_2_ASPSR2	29771	ANT2_SPB_G	0.6	0.00	1	BC/Ventura		No NQC - est. data	Solar
603	SCE	BGSKYN_2_ASSR1B	29775	ANT2_EXP1B_G	0.66	0.00	1	BC/Ventura		Aug NQC	Solar
604	SCE	BGSKYN_2_ASSR3A	29774	ANT2_EXP3A_G	0.63	0.00	1	BC/Ventura		Aug NQC	Solar
605	SCE	BGSKYN_2_ASSR3B	29569	ANT2_EXP3B_G	0.63	0.00	1	BC/Ventura		Aug NQC	Solar
606	SCE	BGSKYN_2_BS3SR3	29776	ANT2_SPA_G	0.6	0.00	1	BC/Ventura		Aug NQC	Solar
607	SCE	BIGCRK_2_EXESWD	24306	B CRK1-1	7.2	0.00	1	BC/Ventura	Rector, Vestal	Aug NQC	Market
608	SCE	BIGCRK_2_EXESWD	24308	B CRK2-1	13.8	0.00	1	BC/Ventura	Rector, Vestal	Aug NQC	Market
609	SCE	BIGCRK_2_EXESWD	24311	B CRK3-1	13.8	0.00	1	BC/Ventura	Rector, Vestal	Aug NQC	Market
610	SCE	BIGCRK_2_EXESWD	24317	MAMOTH1G	13.8	0.00	1	BC/Ventura	Rector, Vestal	Aug NQC	Market

Attachment A - List of physical resources accounted for in the 2027 and 2031 Local Capacity Technical Studies
Physical Res. 2031 LCR

611	SCE	BIGCRK_2_EXESWD	24323	PORTAL	4.8	0.00	1	BC/Ventura	Rector, Vestal	Aug NQC	Market
612	SCE	BIGCRK_2_EXESWD	24306	B CRK1-1	7.2	0.00	2	BC/Ventura	Rector, Vestal	Aug NQC	Market
613	SCE	BIGCRK_2_EXESWD	24308	B CRK2-1	13.8	0.00	2	BC/Ventura	Rector, Vestal	Aug NQC	Market
614	SCE	BIGCRK_2_EXESWD	24311	B CRK3-1	13.8	0.00	2	BC/Ventura	Rector, Vestal	Aug NQC	Market
615	SCE	BIGCRK_2_EXESWD	24318	MAMOTH2G	13.8	0.00	2	BC/Ventura	Rector, Vestal	Aug NQC	Market
616	SCE	BIGCRK_2_EXESWD	24307	B CRK1-2	13.8	0.00	3	BC/Ventura	Rector, Vestal	Aug NQC	Market
617	SCE	BIGCRK_2_EXESWD	24309	B CRK2-2	7.2	0.00	3	BC/Ventura	Rector, Vestal	Aug NQC	Market
618	SCE	BIGCRK_2_EXESWD	24312	B CRK3-2	13.8	0.00	3	BC/Ventura	Rector, Vestal	Aug NQC	Market
619	SCE	BIGCRK_2_EXESWD	24307	B CRK1-2	13.8	0.00	4	BC/Ventura	Rector, Vestal	Aug NQC	Market
620	SCE	BIGCRK_2_EXESWD	24309	B CRK2-2	7.2	0.00	4	BC/Ventura	Rector, Vestal	Aug NQC	Market
621	SCE	BIGCRK_2_EXESWD	24312	B CRK3-2	13.8	0.00	4	BC/Ventura	Rector, Vestal	Aug NQC	Market
622	SCE	BIGCRK_2_EXESWD	24310	B CRK2-3	7.2	0.00	5	BC/Ventura	Rector, Vestal	Aug NQC	Market
623	SCE	BIGCRK_2_EXESWD	24313	B CRK3-3	13.8	0.00	5	BC/Ventura	Rector, Vestal	Aug NQC	Market
624	SCE	BIGCRK_2_EXESWD	24310	B CRK2-3	7.2	0.00	6	BC/Ventura	Rector, Vestal	Aug NQC	Market
625	SCE	BIGCRK_2_EXESWD	24314	B CRK 4	11.5	0.00	41	BC/Ventura	Rector, Vestal	Aug NQC	Market
626	SCE	BIGCRK_2_EXESWD	24314	B CRK 4	11.5	0.00	42	BC/Ventura	Rector, Vestal	Aug NQC	Market
627	SCE	BIGCRK_2_EXESWD	24315	B CRK 8	13.8	0.00	81	BC/Ventura	Rector, Vestal	Aug NQC	Market
628	SCE	BIGCRK_2_EXESWD	24315	B CRK 8	13.8	0.00	82	BC/Ventura	Rector, Vestal	Aug NQC	Market
629	SCE	BIGCRK_7_DAM7				0.00		BC/Ventura	Rector, Vestal	Not modeled Energy Only	Market
630	SCE	BIGCRK_7_MAMRES				0.00		BC/Ventura	Rector, Vestal	Not modeled Energy Only	Market
631	SCE	BIGSKY_2_AS2BT1	29792	ANTLP2_P6A_G	0.69	0.00	1	BC/Ventura			Battery

632	SCE	BIGSKY_2_ASLBT2	29767	ANT2_LAB_G	0.69	0.00	1	BC/Ventura			Battery
633	SCE	BIGSKY_2_BSKSR6	29736	BSKY_G_BA	0.65	0.00	1	BC/Ventura		Aug NQC	Solar
634	SCE	BIGSKY_2_BSKSR7	29742	BSKY_G_BC	0.65	0.00	1	BC/Ventura		Aug NQC	Solar
635	SCE	BIGSKY_2_BSKSR8	29739	BSKY_G_BB	0.65	0.00	1	BC/Ventura		Aug NQC	Solar
636	SCE	BIGSKY_2_SOLAR1	29724	BSKY_G_ABSR	0.42	0.00	1	BC/Ventura		Aug NQC	Solar
637	SCE	BIGSKY_2_SOLAR2	29730	BSKY_G_SOLV	0.42	0.00	1	BC/Ventura		Aug NQC	Solar
638	SCE	BIGSKY_2_SOLAR3	29727	BSKY_G_SMR	0.42	0.00	1	BC/Ventura		Aug NQC	Solar
639	SCE	BIGSKY_2_SOLAR4	29701	BSKY_G_ESWA	0.42	0.00	1	BC/Ventura		Aug NQC	Solar
640	SCE	BIGSKY_2_SOLAR5	29733	BSKY_G_DR12	0.44	0.00	1	BC/Ventura		Aug NQC	Solar
641	SCE	BIGSKY_2_SOLAR6	29745	BSKY_G_DSR3	0.6	0.00	1	BC/Ventura		Aug NQC	Solar
642	SCE	BIGSKY_2_SOLAR7	29733	BSKY_G_DSR12	0.44	0.00	1	BC/Ventura		Aug NQC	Solar
643	SCE	CEDUCR_2_SOLAR1	25049	DUCOR1	0.39	0.00	EQ	BC/Ventura	Vestal	Energy Only	Solar
644	SCE	CEDUCR_2_SOLAR2	25052	DUCOR2	0.39	0.00	EQ	BC/Ventura	Vestal	Energy Only	Solar
645	SCE	CEDUCR_2_SOLAR3	25055	DUCOR3	0.39	0.00	EQ	BC/Ventura	Vestal	Energy Only	Solar
646	SCE	CEDUCR_2_SOLAR4	25058	DUCOR4	0.39	0.00	EQ	BC/Ventura	Vestal	Energy Only	Solar
647	SCE	CHARMN_2_PGONG1	24340	CHARMIN	13.8	0.00	1	BC/Ventura	S.Clara, Moorpark		QF/Selfgen
648	SCE	DELSUR_6_BSOLAR	25802	DELSUR_PV_FD	12.5	0.00	EQ	BC/Ventura		Aug NQC	Solar
649	SCE	DELSUR_6_CREST				0.00		BC/Ventura		Not modeled Energy Only	Market
650	SCE	DELSUR_6_DRYFRB				0.00		BC/Ventura		Not modeled Aug NQC	Market
651	SCE	DELSUR_6_HORSR1				0.00		BC/Ventura		Not modeled Energy Only	Solar
652	SCE	DELSUR_6_SOLAR1	25803	DELSUR_BS_FD	12.5	0.00	EQ	BC/Ventura		Aug NQC	Solar

Attachment A - List of physical resources accounted for in the 2027 and 2031 Local Capacity Technical Studies
Physical Res. 2031 LCR

653	SCE	DELSUR_6_SOLAR4				0.00		BC/Ventura		Not modeled Energy Only	Solar
654	SCE	DELSUR_6_SOLAR5				0.00		BC/Ventura		Not modeled Energy Only	Solar
655	SCE	EASTWD_7_UNIT	24319	EASTWOOD	13.8	0.00	1	BC/Ventura	Rector, Vestal		Market
656	SCE	EDMONS_2_NSPIN	25605	EDMON1AP	14.4	0.00	1	BC/Ventura		Pumps	MUNI
657	SCE	EDMONS_2_NSPIN	25606	EDMON2AP	14.4	0.00	2	BC/Ventura		Pumps	MUNI
658	SCE	EDMONS_2_NSPIN	25607	EDMON3AP	14.4	0.00	3	BC/Ventura		Pumps	MUNI
659	SCE	EDMONS_2_NSPIN	25607	EDMON3AP	14.4	0.00	4	BC/Ventura		Pumps	MUNI
660	SCE	EDMONS_2_NSPIN	25608	EDMON4AP	14.4	0.00	5	BC/Ventura		Pumps	MUNI
661	SCE	EDMONS_2_NSPIN	25608	EDMON4AP	14.4	0.00	6	BC/Ventura		Pumps	MUNI
662	SCE	EDMONS_2_NSPIN	25609	EDMON5AP	14.4	0.00	7	BC/Ventura		Pumps	MUNI
663	SCE	EDMONS_2_NSPIN	25609	EDMON5AP	14.4	0.00	8	BC/Ventura		Pumps	MUNI
664	SCE	EDMONS_2_NSPIN	25610	EDMON6AP	14.4	0.00	9	BC/Ventura		Pumps	MUNI
665	SCE	EDMONS_2_NSPIN	25610	EDMON6AP	14.4	0.00	10	BC/Ventura		Pumps	MUNI
666	SCE	EDMONS_2_NSPIN	25611	EDMON7AP	14.4	0.00	11	BC/Ventura		Pumps	MUNI
667	SCE	EDMONS_2_NSPIN	25611	EDMON7AP	14.4	0.00	12	BC/Ventura		Pumps	MUNI
668	SCE	EDMONS_2_NSPIN	25612	EDMON8AP	14.4	0.00	13	BC/Ventura		Pumps	MUNI
669	SCE	EDMONS_2_NSPIN	25612	EDMON8AP	14.4	0.00	14	BC/Ventura		Pumps	MUNI
670	SCE	GLDFGR_6_SOLAR1	25079	PRIDE B G	0.64	0.00	1	BC/Ventura		Aug NQC	Solar
671	SCE	GLDFGR_6_SOLAR2	25169	PRIDE C G	0.64	0.00	1	BC/Ventura		Aug NQC	Solar
672	SCE	GLOW_6_SOLAR	29896	APPINV	0.42	0.00	1	BC/Ventura		Energy Only	Solar
673	SCE	GOLETA_2_GE2BT3	29827	WDT1454_EQ_G	0.48	0.00	1	BC/Ventura	S.Clara, Moorpark, Goleta		Battery

Attachment A - List of physical resources accounted for in the 2027 and 2031 Local Capacity Technical Studies
Physical Res. 2031 LCR

674	SCE	GOLETA_2_VALBT1	25726	VALLECITO	0.51	0.00	1	BC/Ventura	S.Clara, Moorpark, Goleta		Battery
675	SCE	GOLETA_6_ELLWOD	29004	ELLWOOD	13.8	0.00	1	BC/Ventura	S.Clara, Moorpark, Goleta		Market
676	SCE	GOLETA_6_EXGEN	24362	EXGEN2	13.8	0.00	G1	BC/Ventura	S.Clara, Moorpark, Goleta	Aug NQC - Currently out of service	QF/Selfgen
677	SCE	GOLETA_6_EXGEN	24326	EXGEN1	13.8	0.00	S1	BC/Ventura	S.Clara, Moorpark, Goleta	Aug NQC - Currently out of service	QF/Selfgen
678	SCE	LEBECS_2_UNITS	29051	PSTRIAG1	18	0.00	G1	BC/Ventura		Aug NQC	Market
679	SCE	LEBECS_2_UNITS	29052	PSTRIAG2	18	0.00	G2	BC/Ventura		Aug NQC	Market
680	SCE	LEBECS_2_UNITS	29054	PSTRIAG3	18	0.00	G3	BC/Ventura		Aug NQC	Market
681	SCE	LEBECS_2_UNITS	29053	PSTRIAS1	18	0.00	S1	BC/Ventura		Aug NQC	Market
682	SCE	LEBECS_2_UNITS	29055	PSTRIAS2	18	0.00	S2	BC/Ventura		Aug NQC	Market
683	SCE	LITLRK_6_GBCSR1				0.00		BC/Ventura		Not modeled Aug NQC	Solar
684	SCE	LITLRK_6_SEPV01				0.00		BC/Ventura		Not moleded Energy Only	Market
685	SCE	LITLRK_6_SOLAR1	25840	LITLRCK FD	12.5	0.00	EQ	BC/Ventura		Aug NQC	Solar
686	SCE	LITLRK_6_SOLAR2	25840	LITLRCK FD	12.5	0.00	EQ	BC/Ventura		Aug NQC	Solar
687	SCE	LITLRK_6_SOLAR3	25840	LITLRCK FD	12.5	0.00	EQ	BC/Ventura		Aug NQC	Solar
688	SCE	LITLRK_6_SOLAR4	25840	LITLRCK FD	12.5	0.00	EQ	BC/Ventura		Aug NQC	Solar
689	SCE	LNCSTR_6_CREST				0.00		BC/Ventura		Not modeled Energy Only	Market
690	SCE	LNCSTR_6_SOLAR2	25796	LANCSTR FD1	12.5	0.00	EQ	BC/Ventura		Aug NQC	Solar
691	SCE	MNDALY_6_MCGRTH	29306	MCGPKGEN	13.8	0.00	1	BC/Ventura	S.Clara, Moorpark		Market
692	SCE	MOORPK_2_ACOBT1				0.00		BC/Ventura	Moorpark	Not modeled	Battery
693	SCE	MOORPK_2_CALABS	25081	WDT251	13.8	0.00	EQ	BC/Ventura	Moorpark	Aug NQC	Market

Attachment A - List of physical resources accounted for in the 2027 and 2031 Local Capacity Technical Studies
Physical Res. 2031 LCR

694	SCE	MOORPK_6_QF	240100	MOORARK EQFD	16	0.00	B	BC/Ventura	Moorpark	Aug NQC	Market
695	SCE	MOORPK_6_QF	240100	MOORARK EQFD	16	0.00	HY	BC/Ventura	Moorpark	Aug NQC	Market
696	SCE	MOORPK_6_QF	240100	MOORARK EQFD	16	0.00	PV	BC/Ventura	Moorpark	Aug NQC	Market
697	SCE	MOORPK_6_QF	240100	MOORARK EQFD	16	0.00	T	BC/Ventura	Moorpark	Aug NQC	Market
698	SCE	NEENCH_6_SOLAR	29900	ALPINE_G	0.48	0.00	1	BC/Ventura		Aug NQC	Solar
699	SCE	NOAKS_2_PESBT1	240433	WDT1649_G	0.39	0.00	1	BC/Ventura			Battery
700	SCE	OASIS_6_AR4SR3				0.00		BC/Ventura		Not modeled Energy Only	Solar
701	SCE	OASIS_6_GBDSR4				0.00		BC/Ventura		Not modeled Aug NQC	Solar
702	SCE	OASIS_6_SOLAR1	25095	SOLARISG2	0.2	0.00	2	BC/Ventura		Energy Only	Solar
703	SCE	OASIS_6_SOLAR2	25075	SOLARISG	0.2	0.00	1	BC/Ventura		Aug NQC	Solar
704	SCE	OASIS_6_SOLAR3				0.00		BC/Ventura		Not modeled Energy Only	Solar
705	SCE	OMAR_2_UNIT 1	24102	OMAR 1G	13.8	0.00	1	BC/Ventura			Net Seller
706	SCE	OMAR_2_UNIT 2	24103	OMAR 2G	13.8	0.00	2	BC/Ventura			Net Seller
707	SCE	OMAR_2_UNIT 3	24104	OMAR 3G	13.8	0.00	3	BC/Ventura			Net Seller
708	SCE	OMAR_2_UNIT 4	24105	OMAR 4G	13.8	0.00	4	BC/Ventura			Net Seller
709	SCE	ORMOND_7_UNIT 1	24107	ORMOND1G	26	0.00	R1	BC/Ventura	Moorpark	Strategic Reserve	Market
710	SCE	ORMOND_7_UNIT 2	24108	ORMOND2G	26	0.00	2	BC/Ventura	Moorpark	Strategic Reserve	Market
711	SCE	OSO_6_NSPIN	25614	OSO A P	13.2	0.00	1	BC/Ventura		Pumps	MUNI
712	SCE	OSO_6_NSPIN	25614	OSO A P	13.2	0.00	2	BC/Ventura		Pumps	MUNI
713	SCE	OSO_6_NSPIN	25614	OSO A P	13.2	0.00	3	BC/Ventura		Pumps	MUNI
714	SCE	OSO_6_NSPIN	25614	OSO A P	13.2	0.00	4	BC/Ventura		Pumps	MUNI

Attachment A - List of physical resources accounted for in the 2027 and 2031 Local Capacity Technical Studies
Physical Res. 2031 LCR

715	SCE	OSO_6_NSPIN	25615	OSO B P	13.2	0.00	5	BC/Ventura		Pumps	MUNI
716	SCE	OSO_6_NSPIN	25615	OSO B P	13.2	0.00	6	BC/Ventura		Pumps	MUNI
717	SCE	OSO_6_NSPIN	25615	OSO B P	13.2	0.00	7	BC/Ventura		Pumps	MUNI
718	SCE	OSO_6_NSPIN	25615	OSO B P	13.2	0.00	8	BC/Ventura		Pumps	MUNI
719	SCE	PIUTE_6_GNBSR1	25840	LITLRCK FD	12.5	0.00	EQ	BC/Ventura		Aug NQC	Solar
720	SCE	PLAINV_6_BSOLAR	29917	SSOLAR_GRWKS	0.8	0.00	1	BC/Ventura		Energy Only	Solar
721	SCE	PLAINV_6_DSOLAR	29914	WADR_PV	0.42	0.00	1	BC/Ventura		Aug NQC	Solar
722	SCE	PLAINV_6_NLRSR1	29921	NLR_INVTR	0.42	0.00	1	BC/Ventura		Energy Only	Solar
723	SCE	PLAINV_6_SOLAR3	25089	CNTRL ANT G	0.42	0.00	1	BC/Ventura		Energy Only	Solar
724	SCE	PLAINV_6_SOLARC	25086	SIRA SOLAR G	0.8	0.00	1	BC/Ventura		Energy Only	Solar
725	SCE	PMDLET_6_SOLAR1	29926	SEPV_PE_G	0.8	0.00	1	BC/Ventura		AugNQC	Solar
726	SCE	POLRIS_2_ASEBT1	29565	ANTLP2_P10_G2	0.69	0.00	2	BC/Ventura		Aug NQC	Battery
727	SCE	POLRIS_2_ASESR1	29782	ANTLP2_P10G1	0.63	0.00	1	BC/Ventura		Aug NQC	Solar
728	SCE	POLRIS_2_ASRBT1	29563	ANTLP2_P9_G2	0.69	0.00	1	BC/Ventura		Aug NQC	Battery
729	SCE	POLRIS_2_ASRSR1	29561	ANTLP2_P9_G1	0.63	0.00	1	BC/Ventura		Aug NQC	Solar
730	SCE	RECTOR_2_CREST				0.00		BC/Ventura	Rector, Vestal	Not modeled Energy Only	Market
731	SCE	RECTOR_2_IVANPV				0.00		BC/Ventura	Rector, Vestal	Not modeled Energy Only	Solar
732	SCE	RECTOR_2_KAWEAH	25755	KAWEAH1G	2.4	0.00	1	BC/Ventura	Rector, Vestal	Aug NQC	Market
733	SCE	RECTOR_2_KAWEAH	25756	KAWEAH3G	2.4	0.00	1	BC/Ventura	Rector, Vestal	Aug NQC	Market
734	SCE	RECTOR_2_KAWEAH	25754	KAWEAH2G	2.4	0.00	2	BC/Ventura	Rector, Vestal	Aug NQC	Market
735	SCE	RECTOR_2_KAWH 1	24370	KAWGEN	13.8	0.00	1	BC/Ventura	Rector, Vestal	Aug NQC	Market

736	SCE	RECTOR_2_QF				0.00		BC/Ventura	Rector, Vestal	Aug NQC	Net Seller
737	SCE	RECTOR_2_TFDBM1				0.00		BC/Ventura	Rector, Vestal	Not modeled Energy Only	Market
738	SCE	RECTOR_2_VISSR1				0.00		BC/Ventura	Rector, Vestal	Not modeled Energy Only	Solar
739	SCE	RECTOR_7_TULARE				0.00		BC/Ventura	Rector, Vestal	Not modeled Aug NQC	Market
740	SCE	REDMAN_2_SOLAR				0.00		BC/Ventura		Not modeled Aug NQC	Solar
741	SCE	REDMAN_6_AVSSR1				0.00		BC/Ventura		Not modeled Aug NQC	Solar
742	SCE	REXFRD_2_RSFBX2				0.00		BC/Ventura		Not modeled	Battery
743	SCE	REXFRD_2_RSFSX2				0.00		BC/Ventura		Not modeled	Solar
744	SCE	ROSMND_6_SOLAR				0.00		BC/Ventura		Not modeled Aug NQC	Solar
745	SCE	RSMSLR_6_SOLAR1	29884	DAWNGEN	0.8	0.00	EQ	BC/Ventura		Aug NQC	Solar
746	SCE	RSMSLR_6_SOLAR2	29888	TWILGHTG	0.8	0.00	EQ	BC/Ventura		Aug NQC	Solar
747	SCE	SAUGUS_2_SPESBT1	240418	WDT1532_G	0.48	0.00	1	BC/Ventura			Battery
748	SCE	SAUGUS_6_CREST				0.00		BC/Ventura		Not modeled Energy Only	Market
749	SCE	SAUGUS_6_MWDFTH	25721	FOOTHILL	66	0.00	EQ	BC/Ventura		Aug NQC	MUNI
750	SCE	SAUGUS_6_QF				0.00		BC/Ventura		Not modeled Aug NQC	QF/Selfgen
751	SCE	SAUGUS_7_CHIQCN				0.00		BC/Ventura		Not modeled Aug NQC	Market
752	SCE	SHUTLE_6_RUISR1	25800	ANTELOPE EQFD	12.5	0.00	P1	BC/Ventura		Energy Only	Solar
753	SCE	SNCLRA_2_BWEBT1				0.00		BC/Ventura	S.Clara, Moorpark	Not modeled	Battery
754	SCE	SNCLRA_2_HOWLNG				0.00		BC/Ventura	S.Clara, Moorpark	Not modeled Aug NQC	Market
755	SCE	SNCLRA_2_SILBT1	25899	WDT1520_G	0.48	0.00	EQ	BC/Ventura	S.Clara, Moorpark		Battery
756	SCE	SNCLRA_2_SPRHYD	240104	S.CLARA EQFD	16	0.00	T	BC/Ventura	S.Clara, Moorpark	Aug NQC	Market

Attachment A - List of physical resources accounted for in the 2027 and 2031 Local Capacity Technical Studies
Physical Res. 2031 LCR

757	SCE	SNCLRA_2_UNIT	29952	CAMGEN	13.8	0.00	D1	BC/Ventura	S.Clara, Moorpark		Market
758	SCE	SNCLRA_2_UNIT1	24159	WILLAMET	3.8	0.00	D1	BC/Ventura	S.Clara, Moorpark	Aug NQC	Market
759	SCE	SNCLRA_2_VESBT1	29824	SATICOY_BESS	0.51	0.00	1	BC/Ventura	S.Clara, Moorpark		Battery
760	SCE	SNCLRA_6_OXGEN	24110	OXGEN	13.8	0.00	D1	BC/Ventura	S.Clara, Moorpark		QF/Selfgen
761	SCE	SNCLRA_6_PROCGN	24119	PROCGEN	13.8	0.00	D1	BC/Ventura	S.Clara, Moorpark	Aug NQC	QF/Selfgen
762	SCE	SNCLRA_6_QF	240104	S.CLARA EQFD	16	0.00	PV	BC/Ventura	S.Clara, Moorpark	Aug NQC	QF/Selfgen
763	SCE	SPRGVL_2_CREST				0.00		BC/Ventura	Rector, Vestal	Not modeled Energy Only	Market
764	SCE	SPRGVL_2_EXETPV				0.00		BC/Ventura	Rector, Vestal	Not modeled Energy Only	Market
765	SCE	SPRGVL_2_LINDPV				0.00		BC/Ventura	Rector, Vestal	Not modeled Energy Only	Market
766	SCE	SPRGVL_2_PORTPV				0.00		BC/Ventura	Rector, Vestal	Not modeled Energy Only	Market
767	SCE	SPRGVL_2_SUCCES				0.00		BC/Ventura	Rector, Vestal	Not modeled	Market
768	SCE	SPRGVL_2_TULESC	25715	TULE	2.4	0.00	1	BC/Ventura	Rector, Vestal	Aug NQC	Market
769	SCE	SUNSHN_2_LNDFL	29954	SUNSHINE	13.7	0.00	1	BC/Ventura		Aug NQC	Market
770	SCE	SUNSHN_2_LNDFL	29954	SUNSHINE	13.7	0.00	2	BC/Ventura		Aug NQC	Market
771	SCE	SUNSHN_2_LNDFL	29954	SUNSHINE	13.7	0.00	3	BC/Ventura		Aug NQC	Market
772	SCE	SUNSHN_2_LNDFL	29954	SUNSHINE	13.7	0.00	4	BC/Ventura		Aug NQC	Market
773	SCE	SUNSHN_2_LNDFL	29954	SUNSHINE	13.7	0.00	5	BC/Ventura		Aug NQC	Market
774	SCE	SYCAMR_2_UNIT 1	24143	SYCCYN1G	13.8	0.00	1	BC/Ventura		Aug NQC	Net Seller
775	SCE	SYCAMR_2_UNIT 2	24144	SYCCYN2G	13.8	0.00	2	BC/Ventura		Aug NQC	Net Seller
776	SCE	SYCAMR_2_UNIT 3	24145	SYCCYN3G	13.8	0.00	3	BC/Ventura		Aug NQC	Net Seller
777	SCE	SYCAMR_2_UNIT 4	24146	SYCCYN4G	13.8	0.00	4	BC/Ventura		Aug NQC	Net Seller

Attachment A - List of physical resources accounted for in the 2027 and 2031 Local Capacity Technical Studies
Physical Res. 2031 LCR

778	SCE	TENGEN_2_PL1X2	24148	TENNGEN1	13.8	0.00	D1	BC/Ventura		Aug NQC	Net Seller
779	SCE	TENGEN_2_PL1X2	24149	TENNGEN2	13.8	0.00	D2	BC/Ventura		Aug NQC	Net Seller
780	SCE	TULARE_2_TULBM1				0.00		BC/Ventura		Not modeled Energy Only	Market
781	SCE	VESTAL_2_BTNBT1	240406	WDT1639-ES	0.69	0.00	1	BC/Ventura	Vestal		Battery
782	SCE	VESTAL_2_KERN	24372	KERNRVR 3-1	11	0.00	1	BC/Ventura	Vestal	Aug NQC	QF/Selfgen
783	SCE	VESTAL_2_KERN	24373	KERNRVR 3-2	11	0.00	2	BC/Ventura	Vestal	Aug NQC	QF/Selfgen
784	SCE	VESTAL_2_RTS042	25874	VESTAL EQFC	12,47	0.00	PV	BC/Ventura	Vestal	Energy Only	Market
785	SCE	VESTAL_2_SOLAR1	25064	TULRESLR_1G	0.39	0.00	1	BC/Ventura	Vestal	Aug NQC	Solar
786	SCE	VESTAL_2_SOLAR2	25065	TULRESLR_2G	0.39	0.00	1	BC/Ventura	Vestal	Aug NQC	Solar
787	SCE	VESTAL_2_TS5SR1	25069	WDT1490_PV	0.36	0.00	1	BC/Ventura	Vestal	Aug NQC	Solar
788	SCE	VESTAL_2_UNIT1	25874	VESTAL EQFC	12.5	0.00	SY	BC/Ventura	Vestal	Aug NQC	Market
789	SCE	VESTAL_2_WELLHD	24116	WELLGEN	13.8	0.00	1	BC/Ventura	Vestal		Market
790	SCE	VESTAL_6_QF	29008	LAKEGEN	13.8	0.00	1	BC/Ventura	Vestal	Aug NQC	Market
791	SCE	VESTAL_6_QF	25874	VESTAL EQFC	12,47	0.00	HY	BC/Ventura	Vestal	Aug NQC	Market
792	SCE	WARNE_2_UNIT	25651	WARNE1	13.8	0.00	1	BC/Ventura		Aug NQC	MUNI
793	SCE	WARNE_2_UNIT	25652	WARNE2	13.8	0.00	2	BC/Ventura		Aug NQC	MUNI
794	SCE	ZZ_GOLETA_2_QF	240115	GOLETA EQFD	16	0.00	SY	BC/Ventura	S.Clara, Moorpark, Goleta	No NQC - Pmax	Market
795	SCE	ZZ_GOLETA_6_TR2BM2	240115	GOLETA EQFD	16	0.00	HY	BC/Ventura	S.Clara, Moorpark, Goleta	No NQC - est. data	Market
796	SCE	ZZ_OASIS_6_AR4SR1	25798	OASIS FD	12.5	0.00	P3	BC/Ventura		Energy Only	Solar
797	SCE	ZZ_OASIS_6_AR4SR2	25798	OASIS FD	12.5	0.00	P4	BC/Ventura		Energy Only	Solar
798	SCE	ZZ_OASIS_6_AR8SR3	25798	OASIS FD	12.5	0.00	P2	BC/Ventura		Energy Only	Solar

Attachment A - List of physical resources accounted for in the 2027 and 2031 Local Capacity Technical Studies
Physical Res. 2031 LCR

799	SCE	ZZ_OASIS_6_MA4SR1	25798	OASIS FD	12.5	0.00	EQ	BC/Ventura		Energy Only	Solar
800	SCE	ZZ_OASIS_6_MA4SR1	25798	OASIS FD	12.5	0.00	P1	BC/Ventura		Energy Only	Solar
801	SCE	ZZ_RDWAY_1_WA2SR3	25800	ANTELOPE EQFD	12.5	0.00	P5	BC/Ventura		Energy Only	Solar
802	SCE	ZZ_RDWAY_1_WAISR2	25800	ANTELOPE EQFD	12.5	0.00	P4	BC/Ventura		Energy Only	Solar
803	SCE	ZZ_RECTOR_2_SFVSR1	25855	RECTOR EQFD	12.5	0.00	P5	BC/Ventura	Rector, Vestal	Energy Only	Solar
804	SCE	ZZ_RECTOR_2_SFVSR2	25855	RECTOR EQFD	12.5	0.00	P6	BC/Ventura	Rector, Vestal	Energy Only	Solar
805	SCE	ZZ_RECTOR_2_SFVSR3	25855	RECTOR EQFD	12.5	0.00	P7	BC/Ventura	Rector, Vestal	Energy Only	Solar
806	SCE	ZZ_RECTOR_2_SH1SR1	25855	RECTOR EQFD	12.5	0.00	P3	BC/Ventura	Rector, Vestal	Energy Only	Solar
807	SCE	ZZ_RECTOR_2_SH2SR2	25855	RECTOR EQFD	12.5	0.00	P4	BC/Ventura	Rector, Vestal	Energy Only	Solar
808	SCE	ZZ_RECTOR_2_STUSR1	25855	RECTOR EQFD	12.5	0.00	P1	BC/Ventura	Rector, Vestal	Energy Only	Solar
809	SCE	ZZ_RECTOR_2_STUSR2	25855	RECTOR EQFD	12.5	0.00	P2	BC/Ventura	Rector, Vestal	Energy Only	Solar
810	SCE	ZZ_SHUTLE_6_CREST	25800	ANTELOPE EQFD	12.5	0.00	EQ	BC/Ventura		Energy Only	Market
811	SCE	ZZ_SHUTLE_6_RUISR2	25800	ANTELOPE EQFD	12.5	0.00	P2	BC/Ventura		Energy Only	Solar
812	SCE	ZZ_SHUTLE_6_RUISR3	25800	ANTELOPE EQFD	12.5	0.00	P3	BC/Ventura		Energy Only	Solar
813	SCE	ZZ_TULARE_2_TFCBM1	25855	RECTOR EQFD	12.5	0.00	PV	BC/Ventura	Rector, Vestal	Energy Only	Solar
814	SCE	ZZZ_New Unit	240011	ANODE_G1	34.5	0.00	1	BC/Ventura	Rector, Vestal	Waiting TPD allocation	Battery
815	SCE	ZZZ_New Unit	240102	NEENACH EQFD	12.5	0.00	1	BC/Ventura		Energy Only	Solar
816	SCE	ZZZ_New Unit	240461	WDT1580_PV	0.55	0.00	1	BC/Ventura	Rector, Vestal	No NQC - est. data	Solar
817	SCE	ZZZ_New Unit	240525	NST88338_G	0.6	2.48	1	BC/Ventura		No NQC - est. data	Solar
818	SCE	ZZZ_New Unit	241364	WDT1380_G	0.6	2.60	1	BC/Ventura		No NQC - est. data	Solar
819	SCE	ZZZ_New Unit	25795	WDT1539_G	0.8	10.00	1	BC/Ventura	S.Clara, Moorpark, Goleta	No NQC - Pmax	Battery

Attachment A - List of physical resources accounted for in the 2027 and 2031 Local Capacity Technical Studies
Physical Res. 2031 LCR

820	SCE	ZZZ_New Unit	240336	DAWN_BESS	0.63	12.50	1	BC/Ventura		No NQC - est. data	Battery
821	SCE	ZZZ_New Unit	240338	TWILIGHTL_BS	0.63	12.50	1	BC/Ventura		No NQC - est. data	Battery
822	SCE	ZZZ_New Unit	29345	TOT833_PV	0.55	15.00	1	BC/Ventura		No NQC - est. data	Solar
823	SCE	ZZZ_New Unit	240695	WDT1701_G	0.69	15.50	1	BC/Ventura	S.Clara, Moorpark	No NQC - est. data	Battery
824	SCE	ZZZ_New Unit	25965	TOT896_G2PV	0.55	18.76	1	BC/Ventura	Vestal	No NQC - est. data	Solar
825	SCE	ZZZ_New Unit	25959	TOT896_G1PV	0.55	19.01	1	BC/Ventura	Vestal	No NQC - est. data	Solar
826	SCE	ZZZ_New Unit	29566	ANTLP2_P1BG2	0.69	25.00	1	BC/Ventura		No NQC - est. data	Battery
827	SCE	ZZZ_New Unit	240463	WDT1580_ES	0.6	40.00	1	BC/Ventura	Rector, Vestal	No NQC - est. data	Battery
828	SCE	ZZZ_New Unit	29836	WDT1384_G	0.63	50.00	1	BC/Ventura	Vestal	No NQC - est. data	Hybrid
829	SCE	ZZZ_New Unit	240409	WDT1650_G	0.48	80.00	1	BC/Ventura	Rector, Vestal	No NQC - est. data	Battery
830	SCE	ZZZ_New Unit	29342	TOT833_BS	0.55	82.50	1	BC/Ventura		No NQC - Pmax	Battery
831	SCE	ZZZ_New Unit	25961	TOT896_G1ST	0.55	109.50	1	BC/Ventura	Vestal	No NQC - Pmax	Battery
832	SCE	ZZZ_New Unit	25967	TOT896_G2ST	0.55	109.50	1	BC/Ventura	Vestal	No NQC - Pmax	Battery
833	SCE	ZZZ_New Unit	241343	TOT1089_G1	0.66	250.00	1	BC/Ventura	Moorpark	No NQC - est. data	Battery
834	SCE	ZZZ_New Unit	241344	TOT1089_G2	0.66	250.00	1	BC/Ventura	Moorpark	No NQC - est. data	Battery
835	SCE	ZZZ_New Unit	240014	ANODE_G2	34.5	0.00	2	BC/Ventura	Rector, Vestal	Waiting TPD allocation	Battery
836	SCE	ZZZ_New Unit	240425	WDT1710_G	16	15.00	BS	BC/Ventura		No NQC - est. data	Battery
837	SCE	ZZZ_New Unit	25867	SPRNGVL	12.5	0.00	EN	BC/Ventura	Rector, Vestal	No NQC - est. data	Market
838	SCE	ZZZ_New Unit	240115	GOLETA EQFD	16	0.20	FC	BC/Ventura	S.Clara, Moorpark, Goleta	No NQC - est. data	Market
839	SCE	ZZZ_New Unit	25865	SUAGUS EQFD	12.5	1.00	HY	BC/Ventura		No NQC - est. data	Market
840	SCE	ZZZ_New Unit	25867	SPRNGVL	12.5	0.00	P1	BC/Ventura	Rector, Vestal	No NQC - est. data	Market

Attachment A - List of physical resources accounted for in the 2027 and 2031 Local Capacity Technical Studies
Physical Res. 2031 LCR

841	SCE	ZZZ_New Unit	25867	SPRNGVL	12.5	0.00	P2	BC/Ventura	Rector, Vestal	No NQC - est. data	Market
842	SCE	ZZZ_New Unit	25867	SPRNGVL	12.5	0.00	PV	BC/Ventura	Rector, Vestal	Energy Only	Solar
843	SCE	ZZZ_New Unit	25865	SUAGUS EQFD	12.5	0.00	PV	BC/Ventura		Energy Only	Solar
844	SCE	ZZZ_New Unit	240110	GFID8045	16	0.00	SC	BC/Ventura	S.Clara, Moorpark	Energy Only	Market
845	SCE	ZZZ_New Unit	25865	SUAGUS EQFD	12.5	19.00	T	BC/Ventura		No NQC - est. data	Market
846	SCE	ALAMIT_2_AESBT2	25524	ALMITOS B2_G	0.75	0.00	1	LA Basin	Western		Battery
847	SCE	ALAMIT_2_PL1X3	24575	ALMT CTG1	18	0.00	G1	LA Basin	Western		Market
848	SCE	ALAMIT_2_PL1X3	24576	ALMT CTG2	18	0.00	G2	LA Basin	Western		Market
849	SCE	ALAMIT_2_PL1X3	24577	ALMT STG	18	0.00	S1	LA Basin	Western		Market
850	SCE	ALAMIT_7_ES1	25523	ALMITOS B1_G	0.65	0.00	1	LA Basin	Western		Battery
851	SCE	ALAMIT_7_UNIT 3	24003	ALAMT3 G	18	0.00	RH	LA Basin	Western	Strategic Reserve	Market
852	SCE	ALAMIT_7_UNIT 3	24003	ALAMT3 G	18	0.00	RL	LA Basin	Western	Strategic Reserve	Market
853	SCE	ALAMIT_7_UNIT 4	24004	ALAMT4 G	18	0.00	RH	LA Basin	Western	Strategic Reserve	Market
854	SCE	ALAMIT_7_UNIT 4	24004	ALAMT4 G	18	0.00	RL	LA Basin	Western	Strategic Reserve	Market
855	SCE	ALAMIT_7_UNIT 5	24005	ALAMT5 G	20	0.00	RH	LA Basin	Western	Strategic Reserve	Market
856	SCE	ALAMIT_7_UNIT 5	24005	ALAMT5 G	20	0.00	RL	LA Basin	Western	Strategic Reserve	Market
857	SCE	ALTWD_2_AT3WD3	29077	ALTWNDGEN2	0.6	0.00	1	LA Basin	Eastern, Valley-Devers	Aug NQC	Wind
858	SCE	ALTWD_2_COAWD1	29075	COCHELA_1_2G	0.65	0.00	1	LA Basin	Eastern, Valley-Devers	Aug NQC	Wind
859	SCE	ANAHM_2_CANYN1	25211	CanyonGT 1	13.8	0.00	1	LA Basin	Western		MUNI
860	SCE	ANAHM_2_CANYN2	25212	CanyonGT 2	13.8	0.00	2	LA Basin	Western		MUNI
861	SCE	ANAHM_2_CANYN3	25213	CanyonGT 3	13.8	0.00	3	LA Basin	Western		MUNI
862	SCE	ANAHM_2_CANYN4	25214	CanyonGT 4	13.8	0.00	4	LA Basin	Western		MUNI
863	SCE	ARCOGN_2_UNITS	24011	ARCO 1G	13.8	0.00	1	LA Basin	Western	Aug NQC	Net Seller
864	SCE	ARCOGN_2_UNITS	24012	ARCO 2G	13.8	0.00	2	LA Basin	Western	Aug NQC	Net Seller
865	SCE	ARCOGN_2_UNITS	24013	ARCO 3G	13.8	0.00	3	LA Basin	Western	Aug NQC	Net Seller
866	SCE	ARCOGN_2_UNITS	24014	ARCO 4G	13.8	0.00	4	LA Basin	Western	Aug NQC	Net Seller
867	SCE	ARCOGN_2_UNITS	24163	ARCO 5G	13.8	0.00	5	LA Basin	Western	Aug NQC	Net Seller
868	SCE	ARCOGN_2_UNITS	24164	ARCO 6G	13.8	0.00	6	LA Basin	Western	Aug NQC	Net Seller
869	SCE	BARRE_2_ALASB1				0.00		LA Basin	Western	Not modeled	Hybrid
870	SCE	BARRE_2_QF				0.00		LA Basin	Western	Not modeled	QF/Selfgen
871	SCE	BARRE_2_SBBBT1	240541	WDT1644_BESS	0.55	0.00	1	LA Basin	Western		Battery

Attachment A - List of physical resources accounted for in the 2027 and 2031 Local Capacity Technical Studies
Physical Res. 2031 LCR

872	SCE	BARRE_2_SBBSR1	240542	WDT1644_PV	0.55	0.00	1	LA Basin	Western	Energy Only	Solar
873	SCE	BARRE_6_PEAKER	29309	BARPKGEN	13.8	0.00	1	LA Basin	Western		Market
874	SCE	BLAST_1_WIND	29049	BLAST_G	0.6	0.00	1	LA Basin	Eastern, Valley-Devers	Aug NQC	Wind
875	SCE	BUCKWD_1_NPALM1	240150	DEVERS FC	12.5	0.00	PV	LA Basin	Eastern, Valley-Devers	Aug NQC	Wind
876	SCE	BUCKWD_1_QF	25634	BUCKWIND	115	0.00	QF	LA Basin	Eastern, Valley-Devers	Aug NQC	QF/Selfgen
877	SCE	CABZON_1_WINDA1	29290	CABAZON	33	0.00	1	LA Basin	Eastern, Valley-Devers	Aug NQC	Wind
878	SCE	CAPWD_1_QF	25633	CAPWIND	115	0.00	QF	LA Basin	Eastern, Valley-Devers	Aug NQC	QF/Selfgen
879	SCE	CENTER_2_RHONDO	25810	CENTER EQFD	12.5	0.00	EQ	LA Basin	Western		QF/Selfgen
880	SCE	CENTER_2_SOLAR1				0.00		LA Basin	Western	Not modeled Energy Only	Solar
881	SCE	CENTER_6_PEAKER	29308	CTRPKGEN	13.8	0.00	1	LA Basin	Western		Market
882	SCE	CENTER_6_PEAKER	25187	WDT1429_BATT	0.48	0.00	1	LA Basin	Western	Start-up/Back-up	Battery
883	SCE	CENTRY_6_PL1X4	25302	CLTNCTRY	12	0.00	1	LA Basin	Eastern	Aug NQC	MUNI
884	SCE	CENTRY_6_PL1X4	25302	CLTNCTRY	12	0.00	2	LA Basin	Eastern	Aug NQC	MUNI
885	SCE	CENTRY_6_PL1X4	25302	CLTNCTRY	12	0.00	3	LA Basin	Eastern	Aug NQC	MUNI
886	SCE	CENTRY_6_PL1X4	25302	CLTNCTRY	12	0.00	4	LA Basin	Eastern	Aug NQC	MUNI
887	SCE	CHEVMN_2_UNITS	24023	CHEVGEN 2	13.8	0.00	A	LA Basin	Western, El Nido	Aug NQC	Net Seller
888	SCE	CHEVMN_2_UNITS	24022	CHEVGEN 1	13.8	0.00	B	LA Basin	Western, El Nido	Aug NQC	Net Seller
889	SCE	CHEVMN_2_UNITS	29016	CHEVGEN	13.8	0.00	C1	LA Basin	Western, El Nido	Aug NQC	Net Seller
890	SCE	CHEVMN_2_UNITS	29016	CHEVGEN	13.8	0.00	C2	LA Basin	Western, El Nido	Aug NQC	Net Seller
891	SCE	CHEVMN_2_UNITS	29009	CHEVGEN 5	13.8	0.00	D1	LA Basin	Western, El Nido	Aug NQC	Net Seller
892	SCE	CHEVMN_2_UNITS	29009	CHEVGEN 5	13.8	0.00	D2	LA Basin	Western, El Nido	Aug NQC	Net Seller
893	SCE	CHINO_2_APEBT1	25180	WDT1445BESS_	0.48	0.00	1	LA Basin	Eastern	Aug NQC	Battery
894	SCE	CHINO_2_JURUPA				0.00		LA Basin	Eastern	Not modeled Energy Only	Market
895	SCE	CHINO_2_PESBT1	25812	CHINO EQFC	12.5	0.00	BS	LA Basin	Eastern		Battery
896	SCE	CHINO_2_QF	25812	CHINO EQFC	12.5	0.00	SY	LA Basin	Eastern	Aug NQC	QF/Selfgen
897	SCE	CHINO_2_SASOLR				0.00		LA Basin	Eastern	Not modeled Energy Only	Solar
898	SCE	CHINO_2_SOLAR2				0.00		LA Basin	Eastern	Not modeled Energy Only	Solar
899	SCE	CHINO_6_CIMGEN	24026	CIMGEN	13.8	0.00	D1	LA Basin	Eastern	Aug NQC	QF/Selfgen

Attachment A - List of physical resources accounted for in the 2027 and 2031 Local Capacity Technical Studies
Physical Res. 2031 LCR

900	SCE	CHINO_6_CIMGEN	24026	CIMGEN	13.8	0.00	D2	LA Basin	Eastern	Aug NQC	QF/Selfgen
901	SCE	COLTON_6_AGUAM1	25303	CLTNAGUA	13.8	0.00	1	LA Basin	Eastern	Aug NQC	MUNI
902	SCE	CONDOR_2_CDRBT1	240343	WDT1659_G	0.48	0.00	1	LA Basin	Eastern, West of Devers		Battery
903	SCE	CORONS_2_SOLAR				0.00		LA Basin	Eastern	Not modeled Energy Only	Solar
904	SCE	CORONS_6_CLRWTR	29338	CLRWTRCT	13.8	0.00	G1	LA Basin	Eastern		MUNI
905	SCE	CORONS_6_CLRWTR	29340	CLRWTRST	13.8	0.00	S1	LA Basin	Eastern		MUNI
906	SCE	DELAMO_2_ALASB2	25818	DELAMO EQFD	12.5	0.00	EQ	LA Basin	Western	Aug NQC	Hybrid
907	SCE	DELAMO_2_SOLAR1	25818	DELAMO EQFD	12.5	0.00	EQ	LA Basin	Western	Aug NQC	Solar
908	SCE	DELAMO_2_SOLAR2	25818	DELAMO EQFD	12.5	0.00	EQ	LA Basin	Western	Aug NQC	Solar
909	SCE	DELAMO_2_SOLAR3	25818	DELAMO EQFD	12.5	0.00	EQ	LA Basin	Western	Aug NQC	Solar
910	SCE	DELAMO_2_SOLAR4	25818	DELAMO EQFD	12.5	0.00	EQ	LA Basin	Western	Aug NQC	Solar
911	SCE	DELAMO_2_SOLAR5	25818	DELAMO EQFD	12.5	0.00	EQ	LA Basin	Western	Aug NQC	Solar
912	SCE	DELAMO_2_SOLAR6	25818	DELAMO EQFD	12.5	0.00	EQ	LA Basin	Western	Aug NQC	Solar
913	SCE	DELAMO_2_SOLRC1				0.00		LA Basin	Western	Not modeled Energy Only	Solar
914	SCE	DELAMO_2_SOLRD				0.00		LA Basin	Western	Not modeled Energy Only	Solar
915	SCE	DEVERS_1_SEPV05				0.00		LA Basin	Eastern, Valley-Devers	Not modeled Energy Only	Market
916	SCE	DEVERS_1_SOLAR				0.00		LA Basin	Eastern, Valley-Devers	Not modeled Energy Only	Solar
917	SCE	DEVERS_1_SOLAR1				0.00		LA Basin	Eastern, Valley-Devers	Not modeled Energy Only	Solar
918	SCE	DEVERS_1_SOLAR2				0.00		LA Basin	Eastern, Valley-Devers	Not modeled Energy Only	Solar
919	SCE	DEVERS_2_CS2SR4				0.00		LA Basin	Eastern, Valley-Devers	Not modeled Energy Only	Solar
920	SCE	DEVERS_2_DHSPG2				0.00		LA Basin	Eastern, Valley-Devers	Not modeled Energy Only	Market
921	SCE	DMDVLY_1_UNITS	25424	ESRP P1	6.9	0.00	2	LA Basin	Eastern	Aug NQC	QF/Selfgen
922	SCE	DMDVLY_1_UNITS	25424	ESRP P1	6.9	0.00	3	LA Basin	Eastern	Aug NQC	QF/Selfgen
923	SCE	DMDVLY_1_UNITS	25424	ESRP P1	6.9	0.00	4	LA Basin	Eastern	Aug NQC	QF/Selfgen
924	SCE	DMDVLY_1_UNITS	25425	ESRP P2	6.9	0.00	6	LA Basin	Eastern	Aug NQC	QF/Selfgen

Attachment A - List of physical resources accounted for in the 2027 and 2031 Local Capacity Technical Studies
Physical Res. 2031 LCR

925	SCE	DMDVLY_1_UNITS	25425	ESRP P2	6.9	0.00	7	LA Basin	Eastern	Aug NQC	QF/Selfgen
926	SCE	DMDVLY_1_UNITS	25425	ESRP P2	6.9	0.00	8	LA Basin	Eastern	Aug NQC	QF/Selfgen
927	SCE	DMDVLY_1_UNITS	25426	ESRP P3	6.9	0.00	10	LA Basin	Eastern	Aug NQC	QF/Selfgen
928	SCE	DMDVLY_1_UNITS	25426	ESRP P3	6.9	0.00	11	LA Basin	Eastern	Aug NQC	QF/Selfgen
929	SCE	DMDVLY_1_UNITS	25426	ESRP P3	6.9	0.00	12	LA Basin	Eastern	Aug NQC	QF/Selfgen
930	SCE	DREWS_6_PL1X4	25301	CLTNDREW_G12	12.5	0.00	1	LA Basin	Eastern	Aug NQC	MUNI
931	SCE	DREWS_6_PL1X4	25301	CLTNDREW_G12	12.5	0.00	2	LA Basin	Eastern	Aug NQC	MUNI
932	SCE	DREWS_6_PL1X4	25400	CLTNDREW_G34	12.5	0.00	3	LA Basin	Eastern	Aug NQC	MUNI
933	SCE	DREWS_6_PL1X4	25400	CLTNDREW_G34	12.5	0.00	4	LA Basin	Eastern	Aug NQC	MUNI
934	SCE	DVLCYN_1_UNITS	25648	DVLCYN1G	13.8	0.00	1	LA Basin	Eastern	Aug NQC	MUNI
935	SCE	DVLCYN_1_UNITS	25649	DVLCYN2G	13.8	0.00	2	LA Basin	Eastern	Aug NQC	MUNI
936	SCE	DVLCYN_1_UNITS	25603	DVLCYN3G	13.8	0.00	3	LA Basin	Eastern	Aug NQC	MUNI
937	SCE	DVLCYN_1_UNITS	25604	DVLCYN4G	13.8	0.00	4	LA Basin	Eastern	Aug NQC	MUNI
938	SCE	DYLAN_2_BMTBT1	240169	WDT1648_G	0.39	0.00	1	LA Basin	Eastern, West of Devers		Battery
939	SCE	ECASCO_2_SJGBT1	240288	WDT1558_G	0.55	0.00	1	LA Basin	Eastern, West of Devers	Energy Only	Battery
940	SCE	ELLIS_2_QF	24325	ORCOGEN	13.8	0.00	1	LA Basin	Western	Aug NQC	QF/Selfgen
941	SCE	ELSEGN_2_UN1011	29904	ELSEG5GT	16.5	0.00	5	LA Basin	Western, El Nido	Aug NQC	Market
942	SCE	ELSEGN_2_UN1011	29903	ELSEG6ST	13.8	0.00	6	LA Basin	Western, El Nido	Aug NQC	Market
943	SCE	ELSEGN_2_UN2021	29902	ELSEG7GT	16.5	0.00	7	LA Basin	Western, El Nido	Aug NQC	Market
944	SCE	ELSEGN_2_UN2021	29901	ELSEG8ST	13.8	0.00	8	LA Basin	Western, El Nido	Aug NQC	Market
945	SCE	ESNHWR_2_CS1BT3	241501	EISNHOW_EQFD	33	0.00	B2	LA Basin	Eastern, Valley-Devers		Battery
946	SCE	ESNHWR_2_HDSBT2	241501	EISNHOW_EQFD	33	0.00	B1	LA Basin	Eastern, Valley-Devers		Battery
947	SCE	ESNHWR_2_WC1BT1	240150	DEVERS FC	12.5	0.00	B	LA Basin	Eastern, Valley-Devers		Battery
948	SCE	ETIWND_2_CHMPNE				0.00		LA Basin	Eastern	Not modeled Energy Only	Market
949	SCE	ETIWND_2_FONTNA	25822	ETIWANDA EQFD	12.5	0.00	EQ	LA Basin	Eastern	Aug NQC	QF/Selfgen

Attachment A - List of physical resources accounted for in the 2027 and 2031 Local Capacity Technical Studies
Physical Res. 2031 LCR

950	SCE	ETIWND_2_SOLAR1	25822	ETIWANDA EQFD	12.5	0.00	EQ	LA Basin	Eastern	Aug NQC	Solar
951	SCE	ETIWND_2_SOLAR2				0.00		LA Basin	Eastern	Not modeled Energy Only	Solar
952	SCE	ETIWND_2_SOLAR5				0.00		LA Basin	Eastern	Not modeled Energy Only	Solar
953	SCE	ETIWND_2_UNIT1	24071	INLAND	12.5	0.00	1	LA Basin	Eastern	Aug NQC	QF/Selfgen
954	SCE	ETIWND_2_UNIT1	24071	INLAND	12.5	0.00	2	LA Basin	Eastern	Aug NQC	QF/Selfgen
955	SCE	ETIWND_6_GRPLND	29305	ETWPKGEN	13.8	0.00	1	LA Basin	Eastern		Market
956	SCE	ETIWND_6_GRPLND	25188	WDT1430_BESS	13.8	0.00	1	LA Basin	Eastern	Start-up/Back-up	Battery
957	SCE	ETIWND_6_INEBT1	240354	WDT1669_G	0.69	0.00	1	LA Basin	Eastern		Battery
958	SCE	ETIWND_6_MWDETI	25422	ETI MWDG	13.8	0.00	1	LA Basin	Eastern	Aug NQC	Market
959	SCE	GARNET_1_SOLAR				0.00		LA Basin	Eastern, Valley-Devers	Not modeled Energy Only	Solar
960	SCE	GARNET_1_SOLAR2	25827	GARNET FD	34.5	0.00	PV	LA Basin	Eastern, Valley-Devers	Aug NQC	Solar
961	SCE	GARNET_1_WIND	24815	GARNET	115	0.00	G2	LA Basin	Eastern, Valley-Devers	Aug NQC	Wind
962	SCE	GARNET_1_WINDS				0.00		LA Basin	Eastern, Valley-Devers	Not modeled Aug NQC	Wind
963	SCE	GARNET_1_WT3WND	24815	GARNET	115	0.00	W2	LA Basin	Eastern, Valley-Devers	Energy Only	Market
964	SCE	GARNET_2_COAWD2				0.00		LA Basin	Eastern, Valley-Devers	Not modeled Aug NQC	Wind
965	SCE	GARNET_2_HYDRO				0.00		LA Basin	Eastern, Valley-Devers	Not modeled Aug NQC	Market
966	SCE	GARNET_2_WIND1				0.00		LA Basin	Eastern, Valley-Devers	Not modeled Aug NQC	Wind
967	SCE	GARNET_2_WIND2				0.00		LA Basin	Eastern, Valley-Devers	Not modeled Aug NQC	Wind
968	SCE	GARNET_2_WIND3				0.00		LA Basin	Eastern, Valley-Devers	Not modeled Aug NQC	Wind
969	SCE	GARNET_2_WIND4	24815	GARNET	115	0.00	QF	LA Basin	Eastern, Valley-Devers	Aug NQC	Wind
970	SCE	GARNET_2_WIND5	25827	GARNET FD	34.5	0.00	W	LA Basin	Eastern, Valley-Devers	Aug NQC	Wind
971	SCE	GLNARM_2_UNIT 5	29013	GLENARM5_CT	13.8	0.00	CT	LA Basin	Western		MUNI
972	SCE	GLNARM_2_UNIT 5	29014	GLENARM5_ST	13.8	0.00	ST	LA Basin	Western		MUNI
973	SCE	GLNARM_7_UNIT 1	29005	PASADNA1	13.8	0.00	1	LA Basin	Western		MUNI
974	SCE	GLNARM_7_UNIT 2	29006	PASADNA2	13.8	0.00	1	LA Basin	Western		MUNI
975	SCE	GLNARM_7_UNIT 3	25042	PASADNA3	13.8	0.00	1	LA Basin	Western		MUNI
976	SCE	GLNARM_7_UNIT 4	25043	PASADNA4	13.8	0.00	1	LA Basin	Western		MUNI

Attachment A - List of physical resources accounted for in the 2027 and 2031 Local Capacity Technical Studies
Physical Res. 2031 LCR

977	SCE	HARBGN_7_UNITS	24062	HARBOR G	13.8	0.00	1	LA Basin	Western		Market
978	SCE	HARBGN_7_UNITS	24062	HARBOR G	13.8	0.00	HP	LA Basin	Western		Market
979	SCE	HARBGN_7_UNITS	25510	HARBORG4	4.16	0.00	LP	LA Basin	Western		Market
980	SCE	HINSON_6_LBECH1	24170	LBEACH12	13.8	0.00	1	LA Basin	Western		Market
981	SCE	HINSON_6_LBECH2	24170	LBEACH12	13.8	0.00	2	LA Basin	Western		Market
982	SCE	HINSON_6_LBECH3	24171	LBEACH34	13.8	0.00	3	LA Basin	Western		Market
983	SCE	HINSON_6_LBECH4	24171	LBEACH34	13.8	0.00	4	LA Basin	Western		Market
984	SCE	HNTGBH_2_PL1X3	24580	HUNTBCH CTG1	18	0.00	G1	LA Basin	Western		Market
985	SCE	HNTGBH_2_PL1X3	24581	HUNTBCH CTG2	18	0.00	G2	LA Basin	Western		Market
986	SCE	HNTGBH_2_PL1X3	24582	HUNTBCH STG	18	0.00	S1	LA Basin	Western		Market
987	SCE	HNTGBH_7_UNIT 2	24067	HUNT2 G	13.8	0.00	RH	LA Basin	Western	Strategic Reserve	Market
988	SCE	HNTGBH_7_UNIT 2	24067	HUNT2 G	13.8	0.00	RL	LA Basin	Western	Strategic Reserve	Market
989	SCE	INDIGO_1_UNIT 1	29190	INDIGO G4	13.8	0.00	4	LA Basin	Eastern, Valley-Devers		Market
990	SCE	INDIGO_1_UNIT 2	29191	INDIGO G5	13.8	0.00	5	LA Basin	Eastern, Valley-Devers		Market
991	SCE	INDIGO_1_UNIT 3	29180	INDIGO G3	13.8	0.00	3	LA Basin	Eastern, Valley-Devers		Market
992	SCE	JOANEC_2_ST3BT3	240292	SNTANSG3	0.55	0.00	3	LA Basin	Western		Battery
993	SCE	JOANEC_2_STABT1	25663	SNTANSG1	0.55	0.00	1	LA Basin	Western		Battery
994	SCE	JOANEC_2_STABT2	240289	SNTANSG2	0.55	0.00	2	LA Basin	Western		Battery
995	SCE	JOHANN_2_JOSBT1	25729	JOHANNA_PRP	66	0.00	EQ	LA Basin	Western		Battery
996	SCE	JOHANN_2_JOSBT2	25729	JOHANNA_PRP	66	0.00	EQ	LA Basin	Western		Battery
997	SCE	JOHANN_2_OCEBT2	25729	JOHANNA_PRP	66	0.00	EQ	LA Basin	Western		Battery
998	SCE	JOHANN_2_OCEBT3	25729	JOHANNA_PRP	66	0.00	EQ	LA Basin	Western		Battery
999	SCE	LACIEN_2_VENICE	24337	VENICE	13.8	0.00	1	LA Basin	Western, El Nido	Aug NQC	MUNI
1000	SCE	LAGBEL_2_CBPBT1	240335	WDT1641_G	0.6	0.00	1	LA Basin	Western, El Nido		Battery
1001	SCE	LGHTHP_6_ICEGEN	24070	ICEGEN	13.8	0.00	GT	LA Basin	Western	Aug NQC	QF/Selfgen
1002	SCE	LGHTHP_6_ICEGEN	24070	ICEGEN	13.8	0.00	ST	LA Basin	Western	Aug NQC	QF/Selfgen
1003	SCE	MARVEL_2_MARBT3	25239	MARVEL_ES3	34.5	0.00	1	LA Basin	Eastern, Valley-Devers		Battery
1004	SCE	MARVEL_2_MARBX2	25231	MARVEL_ES1	34.5	0.00	1	LA Basin	Eastern, Valley-Devers		Battery
1005	SCE	MARVEL_2_MARBX2	25235	MARVEL_ES2	34.5	0.00	1	LA Basin	Eastern, Valley-Devers		Battery
1006	SCE	MIRLOM_2_CORONA	25844	MIRALOMA EQFD	12.5	0.00	EQ	LA Basin	Eastern	Aug NQC	QF/Selfgen
1007	SCE	MIRLOM_2_CREST	25844	MIRALOMA EQFD	12.5	0.00	EQ	LA Basin	Eastern	Aug NQC	Market
1008	SCE	MIRLOM_2_LNDFL	25844	MIRALOMA EQFD	12.5	0.00	EQ	LA Basin	Eastern	Aug NQC	Market

Attachment A - List of physical resources accounted for in the 2027 and 2031 Local Capacity Technical Studies
Physical Res. 2031 LCR

1009	SCE	MIRLOM_2_MLBBTA	25185	WDT1425_G1	0.48	0.00	1	LA Basin	Eastern	Aug NQC	Battery
1010	SCE	MIRLOM_2_MLBBTB	25186	WDT1426_G2	0.48	0.00	1	LA Basin	Eastern	Aug NQC	Battery
1011	SCE	MIRLOM_2_TEMESC	25844	MIRALOMA EQFD	12.5	0.00	EQ	LA Basin	Eastern	Aug NQC	QF/Selfgen
1012	SCE	MIRLOM_6_PEAKER	29307	MRLPKGEN	13.8	0.00	1	LA Basin	Eastern		Market
1013	SCE	MIRLOM_7_MWDLKM				0.00		LA Basin	Eastern	Not modeled Aug NQC	MUNI
1014	SCE	MOJAVE_1_SIPHON	25657	MJVSPHN1	13.8	0.00	1	LA Basin	Eastern	Aug NQC	Market
1015	SCE	MOJAVE_1_SIPHON	25657	MJVSPHN1	13.8	0.00	2	LA Basin	Eastern	Aug NQC	Market
1016	SCE	MOJAVE_1_SIPHON	25657	MJVSPHN1	13.8	0.00	3	LA Basin	Eastern	Aug NQC	Market
1017	SCE	MTWIND_1_MVPWD1	29064	MOUNTWND_1G	0.6	0.00	1	LA Basin	Eastern, Valley-Devers	Aug NQC	Wind
1018	SCE	MTWIND_1_UNIT 3	29069	MOUNTWND_3G	0.6	0.00	1	LA Basin	Eastern, Valley-Devers	Aug NQC	Wind
1019	SCE	OLINDA_2_COYCRK				0.00		LA Basin	Western	Not modeled	QF/Selfgen
1020	SCE	OLINDA_2_LNDFL2	29011	BREAPWR2	13.8	0.00	C1	LA Basin	Western	Aug NQC	Market
1021	SCE	OLINDA_2_LNDFL2	29011	BREAPWR2	13.8	0.00	C2	LA Basin	Western	Aug NQC	Market
1022	SCE	OLINDA_2_LNDFL2	29011	BREAPWR2	13.8	0.00	C3	LA Basin	Western	Aug NQC	Market
1023	SCE	OLINDA_2_LNDFL2	29011	BREAPWR2	13.8	0.00	C4	LA Basin	Western	Aug NQC	Market
1024	SCE	OLINDA_2_LNDFL2	29011	BREAPWR2	13.8	0.00	S1	LA Basin	Western	Aug NQC	Market
1025	SCE	OLINDA_7_BLKSND				0.00		LA Basin	Western	Not modeled Aug NQC	Market
1026	SCE	PADUA_2_ONTARO				0.00		LA Basin	Eastern	Not modeled Aug NQC	QF/Selfgen
1027	SCE	PADUA_2_SOLAR1				0.00		LA Basin	Eastern	Not modeled Energy Only	Solar
1028	SCE	PADUA_6_MWDSDM	25851	PADUA EQFC	12.5	0.00	HY	LA Basin	Eastern	Aug NQC	MUNI
1029	SCE	PADUA_6_QF	25851	PADUA EQFC	12.5	0.00	T	LA Basin	Eastern	Aug NQC	QF/Selfgen
1030	SCE	PADUA_7_SDIMAS				0.00		LA Basin	Eastern	Not modeled Aug NQC	Market
1031	SCE	PANERO_2_MWPWD1				0.00		LA Basin	Eastern, Valley-Devers	Not modeled Aug NQC	Wind
1032	SCE	PWEST_1_UNIT	24815	GARNET	115	0.00	PC	LA Basin	Eastern, Valley-Devers	Aug NQC	Market
1033	SCE	RENWD_1_QF	25636	RENWIND	115	0.00	Q1	LA Basin	Eastern, Valley-Devers	Aug NQC	QF/Selfgen
1034	SCE	RENWD_1_QF	25636	RENWIND	115	0.00	Q2	LA Basin	Eastern, Valley-Devers	Aug NQC	QF/Selfgen
1035	SCE	ROMOLA_5_MPBBT1	240214	MENIFEE_G1	0.66	0.00	1	LA Basin	Eastern, Valley		Battery
1036	SCE	ROMOLA_5_MPBBT2	240215	MENIFEE_G2	0.66	0.00	2	LA Basin	Eastern, Valley		Battery

Attachment A - List of physical resources accounted for in the 2027 and 2031 Local Capacity Technical Studies
Physical Res. 2031 LCR

1037	SCE	ROMOLA_5_MPBBT3	240216	MENIFEE_G3	0.66	0.00	3	LA Basin	Eastern, Valley		Battery
1038	SCE	ROMOLA_5_MPBBT4	240217	MENIFEE_G4	0.66	0.00	4	LA Basin	Eastern, Valley		Battery
1039	SCE	ROMOLA_5_MPBBT5	240218	MENIFEE_G5	0.66	0.00	5	LA Basin	Eastern, Valley		Battery
1040	SCE	RVSIDE_2_RERCU3	24299	RERC2G3	13.8	0.00	1	LA Basin	Eastern		MUNI
1041	SCE	RVSIDE_2_RERCU4	24300	RERC2G4	13.8	0.00	1	LA Basin	Eastern		MUNI
1042	SCE	RVSIDE_6_RERCU1	24242	RERC1G	13.8	0.00	1	LA Basin	Eastern		MUNI
1043	SCE	RVSIDE_6_RERCU2	24243	RERC2G	13.8	0.00	1	LA Basin	Eastern		MUNI
1044	SCE	RVSIDE_6_SOLAR1				0.00		LA Basin	Eastern	Not modeled Aug NQC	Solar
1045	SCE	RVSIDE_6_SPRING	24240	SPRINGS1	13.8	0.00	1	LA Basin	Eastern		Market
1046	SCE	RVSIDE_6_SPRING	24241	SPRINGS3	13.8	0.00	1	LA Basin	Eastern		Market
1047	SCE	RVSIDE_6_SPRING	24240	SPRINGS1	13.8	0.00	2	LA Basin	Eastern		Market
1048	SCE	RVSIDE_6_SPRING	24241	SPRINGS3	13.8	0.00	2	LA Basin	Eastern		Market
1049	SCE	SANITR_6_UNITS	24324	SANIGEN	13.8	0.00	R1	LA Basin	Eastern	Aug NQC	QF/Selfgen
1050	SCE	SANTGO_2_LNDFL1	24341	COYGEN	13.8	0.00	R1	LA Basin	Western	Aug NQC	Market
1051	SCE	SANWD_1_QF	29072	SANWIND_G	0.48	0.00	1	LA Basin	Eastern, Valley-Devers	Aug NQC	Wind
1052	SCE	SBERDO_2_PSP3	24921	MNTV-G3A	18	0.00	1	LA Basin	Eastern, West of Devers		Market
1053	SCE	SBERDO_2_PSP3	24922	MNTV-G3B	18	0.00	1	LA Basin	Eastern, West of Devers		Market
1054	SCE	SBERDO_2_PSP3	24923	MNTV-ST3	18	0.00	1	LA Basin	Eastern, West of Devers		Market
1055	SCE	SBERDO_2_PSP4	24924	MNTV-G4A	18	0.00	1	LA Basin	Eastern, West of Devers		Market
1056	SCE	SBERDO_2_PSP4	24925	MNTV-G4B	18	0.00	1	LA Basin	Eastern, West of Devers		Market
1057	SCE	SBERDO_2_PSP4	24926	MNTV-ST4	18	0.00	1	LA Basin	Eastern, West of Devers		Market
1058	SCE	SBERDO_2_SNTANA	25861	SNBRDNO FD2	12.5	0.00	PV	LA Basin	Eastern, West of Devers	Aug NQC	Solar
1059	SCE	SBERDO_6_MILLCK	25863	SNBRDNO FD1	12.5	0.00	EQ	LA Basin	Eastern, West of Devers	Aug NQC	QF/Selfgen
1060	SCE	SEAWND_2_AMWWD1				0.00		LA Basin	Eastern, Valley-Devers	Not modeled Aug NQC	Wind
1061	SCE	SENTNL_2_CTG1	29101	SENTINEL_G1	13.8	0.00	1	LA Basin	Eastern, Valley-Devers		Market
1062	SCE	SENTNL_2_CTG2	29102	SENTINEL_G2	13.8	0.00	1	LA Basin	Eastern, Valley-Devers		Market
1063	SCE	SENTNL_2_CTG3	29103	SENTINEL_G3	13.8	0.00	1	LA Basin	Eastern, Valley-Devers		Market
1064	SCE	SENTNL_2_CTG4	29104	SENTINEL_G4	13.8	0.00	1	LA Basin	Eastern, Valley-Devers		Market

1065	SCE	SENTNL_2_CTG5	29105	SENTINEL_G5	13.8	0.00	1	LA Basin	Eastern, Valley-Devers		Market
1066	SCE	SENTNL_2_CTG6	29106	SENTINEL_G6	13.8	0.00	1	LA Basin	Eastern, Valley-Devers		Market
1067	SCE	SENTNL_2_CTG7	29107	SENTINEL_G7	13.8	0.00	1	LA Basin	Eastern, Valley-Devers		Market
1068	SCE	SENTNL_2_CTG8	29108	SENTINEL_G8	13.8	0.00	1	LA Basin	Eastern, Valley-Devers		Market
1069	SCE	STANTN_2_SBEBX2	25675	WH_STN_5	0.55	0.00	1	LA Basin	Western		Battery
1070	SCE	STANTN_2_SBEBX2	25677	WH_STN_7	0.55	0.00	1	LA Basin	Western		Battery
1071	SCE	STANTN_2_STAGT1	25670	WH_STN_1	13.8	0.00	1	LA Basin	Western		Market
1072	SCE	STANTN_2_STAGT2	25671	WH_STN_2	13.8	0.00	1	LA Basin	Western		Market
1073	SCE	TIFFNY_1_DILLON	29021	WINTEC6	115	0.00	1	LA Basin	Eastern, Valley-Devers	Aug NQC	Wind
1074	SCE	TRNSWD_1_QF	25746	TRANWND_1G	0.4	0.00	1	LA Basin	Eastern, Valley-Devers	Aug NQC	Wind
1075	SCE	TRNSWD_1_QF	25749	TRANWND_2G	0.4	0.00	2	LA Basin	Eastern, Valley-Devers	Aug NQC	Wind
1076	SCE	VALLEY_5_ORTBT1	240349	WDT1636_G	0.6	0.00	EQ	LA Basin	Eastern, Valley, Valley-Devers		Battery
1077	SCE	VALLEY_5_PERRIS	25872	VALLEYS EQFD	12.5	0.00	T	LA Basin	Eastern, Valley, Valley-Devers	Aug NQC	QF/Selfgen
1078	SCE	VALLEY_5_REDMTN	25872	VALLEYS EQFD	12.5	0.00	PV	LA Basin	Eastern, Valley, Valley-Devers	Aug NQC	QF/Selfgen
1079	SCE	VALLEY_5_SOLAR1				0.00		LA Basin	Eastern, Valley, Valley-Devers	Not modeled Energy Only	Solar
1080	SCE	VALLEY_5_SOLAR2	25846	WDT786G	34.5	0.00	EQ	LA Basin	Eastern, Valley, Valley-Devers	Aug NQC	Solar
1081	SCE	VENWD_1_WIND3	25645	VENWIND	115	0.00	EU	LA Basin	Eastern, Valley-Devers	Aug NQC	Wind
1082	SCE	VERNON_6_GONZL1				0.00		LA Basin	Western	Not modeled	MUNI
1083	SCE	VERNON_6_GONZL2				0.00		LA Basin	Western	Not modeled	MUNI
1084	SCE	VERNON_6_MALBRG	24239	MALBRG1G	13.8	0.00	C1	LA Basin	Western		MUNI
1085	SCE	VERNON_6_MALBRG	24240	MALBRG2G	13.8	0.00	C2	LA Basin	Western		MUNI
1086	SCE	VERNON_6_MALBRG	24241	MALBRG3G	13.8	0.00	S3	LA Basin	Western		MUNI
1087	SCE	VILLPK_2_VALLYV				0.00		LA Basin	Western	Not modeled Aug NQC	QF/Selfgen
1088	SCE	VILLPK_6_MWDYOR				0.00		LA Basin	Western	Not modeled Aug NQC	MUNI
1089	SCE	VISTA_6_QF	25887	VSTA_EQFD	12.5	0.00	EQ	LA Basin	Eastern	Aug NQC	QF/Selfgen
1090	SCE	WALCRK_2_CTG1	29201	WALCRKG1	13.8	0.00	1	LA Basin	Western		Market
1091	SCE	WALCRK_2_CTG2	29202	WALCRKG2	13.8	0.00	1	LA Basin	Western		Market
1092	SCE	WALCRK_2_CTG3	29203	WALCRKG3	13.8	0.00	1	LA Basin	Western		Market
1093	SCE	WALCRK_2_CTG4	29204	WALCRKG4	13.8	0.00	1	LA Basin	Western		Market

Attachment A - List of physical resources accounted for in the 2027 and 2031 Local Capacity Technical Studies
Physical Res. 2031 LCR

1094	SCE	WALCRK_2_CTG5	29205	WALCRKG5	13.8	0.00	1	LA Basin	Western		Market
1095	SCE	WALNUT_2_SOLAR				0.00		LA Basin	Western	Not modeled Energy Only	Solar
1096	SCE	WALNUT_6_HILLGEN				0.00		LA Basin	Western	Not modeled Aug NQC	Net Seller
1097	SCE	WALNUT_7_WCOVST				0.00		LA Basin	Western	Not modeled Aug NQC	Market
1098	SCE	WHTWTR_1_WINDA1	241001	WHITEWTR_G	0.58	0.00	1	LA Basin	Eastern, Valley-Devers	Aug NQC	Wind
1099	SCE	ZZ_BUCKWD_7_WINTCV	25634	BUCKWIND	115	0.00	W5	LA Basin	Eastern, Valley-Devers	Repowering	Wind
1100	SCE	ZZ_DEVERS_1_QF	25639	SEAWIND	115	0.00	QF	LA Basin	Eastern, Valley-Devers	Mothballed	QF/Selfgen
1101	SCE	ZZ_DEVERS_1_QF	25632	TERAWND	115	0.00	QF	LA Basin	Eastern, Valley-Devers	Mothballed	QF/Selfgen
1102	SCE	ZZ_GARNET_1_UNITS	24815	GARNET	115	0.00	G1	LA Basin	Eastern, Valley-Devers	Mothballed	Market
1103	SCE	ZZ_GARNET_2_HYDRO	25827	GARNET FD	34.5	0.00	T	LA Basin	Eastern, Valley-Devers	Aug NQC	Market
1104	SCE	ZZ_HINSON_2_CTCSR1	25892	HINSON EQDS	12.5	0.00	P1	LA Basin	Western	Energy Only	Solar
1105	SCE	ZZ_JOANEC_2_ST3BT4	240295	SNTANSG4	0.55	40.00	4	LA Basin	Western	No NQC - P max	Battery
1106	SCE	ZZ_JOHANN_2_T1BBT1	240498	JOHANNA EQFD	12.5	1.40	BS	LA Basin	Western	WDAT1428 - No NQC - est. data	Battery
1107	SCE	ZZ_LAGBEL_2_CDCSR1	241503	LAGUBELL_EQF	16	0.00	P3	LA Basin	Western, El Nido		Solar
1108	SCE	ZZ_LAGBEL_2_EDCSR1	241503	LAGUBELL_EQF	16	0.00	P1	LA Basin	Western, El Nido		Solar
1109	SCE	ZZ_LAGBEL_2_EDCSR2	241503	LAGUBELL_EQF	16	0.00	P2	LA Basin	Western, El Nido		Solar
1110	SCE	ZZ_LGHTHP_2_SBDSR1	240504	LITEHIPE EQF	12.5	0.00	P1	LA Basin	Western	Energy Only	Solar
1111	SCE	ZZ_LGHTHP_2_SBDSR2	240504	LITEHIPE EQF	12.5	0.00	P2	LA Basin	Western	Energy Only	Solar
1112	SCE	ZZ_MESAS_2_YORBT1	25842	MESACAL EQFD	16	0.01	B1	LA Basin	Western	No NQC - est. data	Solar
1113	SCE	ZZ_MOBGEN_6_UNIT 1	24094	MOBGEN1	13.8	0.00	1	LA Basin	Western, El Nido	No NQC - hist. data	QF/Selfgen
1114	SCE	ZZ_MOBGEN_6_UNIT 1	24329	MOBGEN2	13.8	0.00	1	LA Basin	Western, El Nido	No NQC - hist. data	QF/Selfgen
1115	SCE	ZZ_MTWIND_1_UNIT 2	29066	MOUNTWND_2G	0.6	0.00	1	LA Basin	Eastern, Valley-Devers	Mothballed	Wind
1116	SCE	ZZ_NA	24330	OUTFALL1	13.8	0.00	1	LA Basin	Western, El Nido	No NQC - hist. data	QF/Selfgen

Attachment A - List of physical resources accounted for in the 2027 and 2031 Local Capacity Technical Studies
Physical Res. 2031 LCR

1117	SCE	ZZ_NA	24331	OUTFALL2	13.8	0.00	1	LA Basin	Western, El Nido	No NQC - hist. data	QF/Selfgen
1118	SCE	ZZ_NA	24327	THUMSGEN	13.8	0.00	1	LA Basin	Western	No NQC - hist. data	QF/Selfgen
1119	SCE	ZZ_NA	25838	LA FRSA EQFD	16	0.07	EQ	LA Basin	Western	No NQC - est. data	Market
1120	SCE	ZZ_NA	25820	EL NIDO EQFD	16	0.09	EQ	LA Basin	Western, El Nido	No NQC - est. data	Solar
1121	SCE	ZZ_NA	25883	VILLAPK EQFD	12.5	0.14	EQ	LA Basin	Western	No NQC - est. data	Solar
1122	SCE	ZZ_NA	25889	WALNUT EQFD	12.5	0.20	EQ	LA Basin	Western	No NQC - est. data	Solar
1123	SCE	ZZ_NA	25892	HINSON EQDS	12.5	1.70	EQ	LA Basin	Western	No NQC - est. data	Market
1124	SCE	ZZ_NA	25857	RIOHNDO EQFD	12.5	5.00	HY	LA Basin	Western	No NQC - est. data	Market
1125	SCE	ZZ_NA	25857	RIOHNDO EQFD	12.5	0.06	PV	LA Basin	Western	No NQC - est. data	Solar
1126	SCE	ZZ_NA	25838	LA FRSA EQFD	16	0.20	PV	LA Basin	Western	No NQC - est. data	Solar
1127	SCE	ZZ_NA	25892	HINSON EQDS	12.5	0.70	PV	LA Basin	Western	No NQC - est. data	Solar
1128	SCE	ZZ_NA	240514	VALLEYSC EQF	12.5	1.10	PV	LA Basin	Eastern, Valley, Valley-Devers		Solar
1129	SCE	ZZ_NA	240505	MIRAGE EQFD	12.5	1.20	PV	LA Basin	Eastern, Valley-Devers	No NQC - est. data	Solar
1130	SCE	ZZ_NA	25812	CHINO EQFC	12.5	2.20	PV	LA Basin	Eastern		Solar
1131	SCE	ZZ_NA	240150	DEVERS FC	12.5	1.00	T	LA Basin	Eastern, Valley-Devers		Market
1132	SCE	ZZ_PADUA_2_SOLAR1	25851	PADUA EQFC	12.5	1.60	PV	LA Basin	Eastern		Solar
1133	SCE	ZZ_PANSEA_1_PANARO	25640	PANAERO	115	3.40	QF	LA Basin	Eastern, Valley-Devers		Wind
1134	SCE	ZZ_SANTGO_2_MABBT1	25192	WDT1406_G	0.48	0.00	1	LA Basin	Western		Battery
1135	SCE	ZZ_VENWD_1_WIND1	25645	VENWIND	115	0.00	Q1	LA Basin	Eastern, Valley-Devers	Mothballed	QF/Selfgen
1136	SCE	ZZ_VENWD_1_WIND2	25645	VENWIND	115	0.00	Q2	LA Basin	Eastern, Valley-Devers	Mothballed	QF/Selfgen
1137	SCE	ZZZ_New Unit	240002	CATHODE1_G	34.5	0.00	1	LA Basin	Western	Waiting TPD allocation	Battery
1138	SCE	ZZZ_New Unit	24899	WDT1510G	0.69	0.00	1	LA Basin	Eastern	Energy Only	Battery
1139	SCE	ZZZ_New Unit	240536	WDT1582	34.5	0.00	1	LA Basin	Western	No NQC - est. data	Solar

Attachment A - List of physical resources accounted for in the 2027 and 2031 Local Capacity Technical Studies
Physical Res. 2031 LCR

1140	SCE	ZZZ_New Unit	240474	WDT1583	34.5	0.00	1	LA Basin	Western	No NQC - est. data	Solar
1141	SCE	ZZZ_New Unit	240155	UNIMDGEN	12	1.00	1	LA Basin	Eastern, West of Devers	No NQC - est. data	Market
1142	SCE	ZZZ_New Unit	240501	WDT1392	0.48	10.00	1	LA Basin	Western	No NQC - est. data	Market
1143	SCE	ZZZ_New Unit	240502	WDT1393	0.48	10.00	1	LA Basin	Western	No NQC - est. data	Market
1144	SCE	ZZZ_New Unit	240536	WDT1582	34.5	10.00	1	LA Basin	Western	No NQC - P max	Battery
1145	SCE	ZZZ_New Unit	240474	WDT1583	34.5	10.00	1	LA Basin	Western	No NQC - P max	Battery
1146	SCE	ZZZ_New Unit	240513	WDT292A	12.5	10.00	1	LA Basin	Western	No NQC - est. data	Market
1147	SCE	ZZZ_New Unit	240451	WH_STN_8	0.55	10.00	1	LA Basin	Western	No NQC - P max	Battery
1148	SCE	ZZZ_New Unit	240452	WH_STN_9	0.55	10.00	1	LA Basin	Western	No NQC - P max	Battery
1149	SCE	ZZZ_New Unit	240533	WDT1602_G	0.39	20.00	1	LA Basin	Western, El Nido	No NQC - P max	Battery
1150	SCE	ZZZ_New Unit	250021	GOODRICH_BES	13.8	25.00	1	LA Basin	Western		Battery
1151	SCE	ZZZ_New Unit	241357	WDT1754_G	0.66	50.00	1	LA Basin	Western		Battery
1152	SCE	ZZZ_New Unit	240594	TOT1005_G_ES	0.65	75.00	1	LA Basin	Eastern, Valley-Devers	No NQC - est. data	Battery
1153	SCE	ZZZ_New Unit	240319	WDT1702_G	0.38	77.00	1	LA Basin	Western	No NQC - P max	Battery
1154	SCE	ZZZ_New Unit	240426	WDT1725_G	0.39	90.00	1	LA Basin	Western	No NQC - P max	Battery
1155	SCE	ZZZ_New Unit	240019	RAMPA_G	34.5	100.00	1	LA Basin	Eastern	No NQC - Pmax	Battery
1156	SCE	ZZZ_New Unit	240315	WDT1652_G	0.6	100.00	1	LA Basin	Western	No NQC - P max	Battery
1157	SCE	ZZZ_New Unit	240473	WDT1719_G	0.39	100.00	1	LA Basin	Eastern	No NQC - Pmax	Battery
1158	SCE	ZZZ_New Unit	240436	WDT1816-G	34.5	110.00	1	LA Basin	Western	No NQC - P max	Battery
1159	SCE	ZZZ_New Unit	241329	TOT1028_G1	0.63	200.00	1	LA Basin	Western		Battery
1160	SCE	ZZZ_New Unit	241339	TOT1033_B1	0.63	200.00	1	LA Basin	Western		Battery
1161	SCE	ZZZ_New Unit	240569	TOT906_G	0.69	200.00	1	LA Basin	Western		Battery
1162	SCE	ZZZ_New Unit	241013	TOT907_G	0.6	200.00	1	LA Basin	Western		Battery
1163	SCE	ZZZ_New Unit	240445	TOT927_G	0.39	250.00	1	LA Basin	Western	No NQC - P max	Battery
1164	SCE	ZZZ_New Unit	240004	CATHODE2_G	34.5	0.00	2	LA Basin	Western	Waiting TPD allocation	Battery
1165	SCE	ZZZ_New Unit	240512	LAS LOMA FD	12.5	8.83	2	LA Basin	Western	No NQC - est. data	Market
1166	SCE	ZZZ_New Unit	241328	TOT1028_G2	0.63	200.00	2	LA Basin	Western		Battery
1167	SCE	ZZZ_New Unit	241338	TOT1033_B2	0.63	200.00	2	LA Basin	Western		Battery

Attachment A - List of physical resources accounted for in the 2027 and 2031 Local Capacity Technical Studies
Physical Res. 2031 LCR

1168	SCE	ZZZ_New Unit	240509	SANTIAGO EQF	12.5	0.50	BS	LA Basin	Western	No NQC - est. data	Battery
1169	SCE	ZZZ_New Unit	25842	MESACAL EQFD	0.66	4.50	BS	LA Basin	Western	No NQC - est. data	Battery
1170	SCE	ZZZ_New Unit	240500	JOHANNA FD	12.5	0.00	EQ	LA Basin	Western	No NQC - est. data	Battery
1171	SCE	ZZZ_New Unit	25832	WDT334G	0.2	0.00	EQ	LA Basin	Eastern, Valley-Devers	Energy Only	Solar
1172	SCE	ZZZ_New Unit	25833	WDT458G	0.2	0.00	EQ	LA Basin	Eastern, Valley-Devers	Energy Only	Solar
1173	SCE	ZZZ_New Unit	240504	LITEHIPE EQF	12.5	0.60	EQ	LA Basin	Western	No NQC - est. data	Market
1174	SCE	ZZZ_New Unit	240158	VSTA BIO	12.5	1.00	EQ	LA Basin	Eastern	No NQC - est. data	Market
1175	SCE	ZZZ_New Unit	240159	VSTA GAS	12.5	1.00	EQ	LA Basin	Eastern	No NQC - est. data	Market
1176	SCE	ZZZ_New Unit	25834	HI DSRT	34.5	1.20	EQ	LA Basin	Eastern, Valley-Devers	No NQC - est. data	Market
1177	SCE	ZZZ_New Unit	25885	VSTA EQFD	12.5	3.70	EQ	LA Basin	Eastern		Market
1178	SCE	ZZZ_New Unit	240507	OLINDA EQF	12.5	5.15	EQ	LA Basin	Western	No NQC - est. data	Market
1179	SCE	ZZZ_New Unit	240495	DECLEZ EQ FC	12.5	9.67	EQ	LA Basin	Eastern	No NQC - est. data	Market
1180	SCE	ZZZ_New Unit	241354	WDT1683_G	0.48	65.00	EQ	LA Basin	Western		Battery
1181	SCE	ZZZ_New Unit	240346	WDT1635_G	0.6	80.00	EQ	LA Basin	Eastern, Valley, Valley-Devers		Battery
1182	SCE	ZZZ_New Unit	240516	MERCED EQFD	12.5	13.00	LG	LA Basin	Western	No NQC - est. data	Market
1183	SCE	ZZZ_New Unit	240498	JOHANNA EQFD	12.5	0.06	PV	LA Basin	Western	No NQC - est. data	Solar
1184	SCE	ZZZ_New Unit	240504	LITEHIPE EQF	12.5	0.06	PV	LA Basin	Western	No NQC - est. data	Solar
1185	SCE	ZZZ_New Unit	240509	SANTIAGO EQF	12.5	0.29	PV	LA Basin	Western	No NQC - est. data	Solar
1186	SCE	ZZZ_New Unit	25842	MESACAL EQFD	0.66	0.80	PV	LA Basin	Western	No NQC - est. data	Solar
1187	SCE	ZZZ_New Unit	240520	MILLIKEM FD3	12.5	1.36	PV	LA Basin	Eastern	No NQC - est. data	Solar
1188	SCE	ZZZ_New Unit	240498	JOHANNA EQFD	12.5	0.64	SY	LA Basin	Western	No NQC - est. data	Market
1189	SCE	ZZZ_New Unit	240504	LITEHIPE EQF	12.5	5.00	T	LA Basin	Western	No NQC - est. data	Market
1190	SCE	ZZZ_New Unit	240153	BOTTLE	34.5	1.70	W1	LA Basin	Eastern, Valley-Devers	No NQC - est. data	Wind

Attachment A - List of physical resources accounted for in the 2027 and 2031 Local Capacity Technical Studies
Physical Res. 2031 LCR

1191	SCE	ZZZ_New Unit	240526	WDT1131QFC	0.21	4.70	W1	LA Basin	Eastern, Valley-Devers	No NQC - est. data	Wind
1192	SCE	ZZZ_New Unit	240527	WDT016A	0.21	1.09	W2	LA Basin	Eastern, Valley-Devers	No NQC - est. data	Wind
1193	SCE	ZZZ_New Unit	240528	WDT1880QFC	0.21	4.00	W3	LA Basin	Eastern, Valley-Devers	No NQC - est. data	Wind
1194	SDG&E	BGROCK_2_BRFBX2	23416	Q1166_ES_G1	0.6	0.00	1	SD-IV			Battery
1195	SDG&E	BGROCK_2_BRFBX2	23438	Q1166_ES_G2	0.6	0.00	1	SD-IV			Battery
1196	SDG&E	BLVRDE_6_BLVBT1	22088	BOULEVRD	69	0.00	27	SD-IV			Battery
1197	SDG&E	BORDER_6_LTMCT1	22907	BD_BESS	0.69	0.00	1	SD-IV	San Diego, Border		Market
1198	SDG&E	BORDER_6_UNITA1	22149	CALPK_BD	13.8	0.00	1	SD-IV	San Diego, Border		Market
1199	SDG&E	BREGGO_6_DEGRSL	22084	BORREGO	69	0.00	6	SD-IV	San Diego	Aug NQC	Solar
1200	SDG&E	BREGGO_6_DSEBT1	22084	BORREGO	69	0.00	60	SD-IV	San Diego		Battery
1201	SDG&E	BREGGO_6_SOLAR	22082	BR GEN1	0.21	0.00	1	SD-IV	San Diego	Aug NQC	Solar
1202	SDG&E	CAMERN_6_BSPSR1	22104	CAMERON	69	0.00	78	SD-IV	San Diego	Energy Only	Solar
1203	SDG&E	CARLS1_2_CARCT1	22786	EA GEN1 U6	13.8	0.00	1	SD-IV	San Diego	Aug NQC	Market
1204	SDG&E	CARLS1_2_CARCT1	22787	EA GEN1 U7	13.8	0.00	1	SD-IV	San Diego	Aug NQC	Market
1205	SDG&E	CARLS1_2_CARCT1	22783	EA GEN1 U8	13.8	0.00	1	SD-IV	San Diego	Aug NQC	Market
1206	SDG&E	CARLS1_2_CARCT1	22784	EA GEN1 U9	13.8	0.00	1	SD-IV	San Diego	Aug NQC	Market
1207	SDG&E	CARLS2_1_CARCT1	22789	EA GEN1 U10	13.8	0.00	1	SD-IV	San Diego	Aug NQC	Market
1208	SDG&E	CHILLS_1_SYCENG	22120	CARLTNHS	138	0.00	1	SD-IV	San Diego	Aug NQC	QF/Selfgen
1209	SDG&E	CHILLS_7_UNITA1	22120	CARLTNHS	138	0.00	2	SD-IV	San Diego	Aug NQC	QF/Selfgen
1210	SDG&E	CLRMNT_6_CLEBT1	22136	CLAIRMNT	69	0.00	28	SD-IV	San Diego		Battery
1211	SDG&E	CNTNLA_2_SOLAR1	23401	DW GEN3 G1	0.33	0.00	1	SD-IV		Aug NQC	Solar
1212	SDG&E	CNTNLA_2_SOLAR2	23402	DW GEN3 G2	0.33	0.00	2	SD-IV		Aug NQC	Solar
1213	SDG&E	CPVERD_2_SOLAR	23309	IV GEN3 G1	0.31	0.00	1	SD-IV		Aug NQC	Solar
1214	SDG&E	CPVERD_2_SOLAR	23301	IV GEN3 G2	0.31	0.00	1	SD-IV		Aug NQC	Solar
1215	SDG&E	CRELMN_6_RAMON1	22152	CREELMAN	69	0.00	27	SD-IV	San Diego	Aug NQC	Solar
1216	SDG&E	CRELMN_6_RAMON2	22152	CREELMAN	69	0.00	27	SD-IV	San Diego	Aug NQC	Solar
1217	SDG&E	CRELMN_6_RAMSR3	22152	CREELMAN	69	0.00	35	SD-IV	San Diego	Aug NQC	Solar
1218	SDG&E	CRSTWD_6_KUMYAY	22915	KUMEYAAY	0.69	0.00	1	SD-IV	San Diego	Aug NQC	Wind
1219	SDG&E	CSLR4S_2_SOLAR	23298	DW GEN1 G1	0.32	0.00	1	SD-IV		Aug NQC	Solar
1220	SDG&E	CSLR4S_2_SOLAR	23299	DW GEN1 G2	0.32	0.00	1	SD-IV		Aug NQC	Solar
1221	SDG&E	DREWSR_2_BHSSR1	23585	DW GEN7_GEN	0.63	0.00	1	SD-IV		Aug NQC	Solar

Attachment A - List of physical resources accounted for in the 2027 and 2031 Local Capacity Technical Studies
Physical Res. 2031 LCR

1222	SDG&E	ELCAJN_6_EB1BT1	22208	EL CAJON	69	0.00	13	SD-IV	San Diego, El Cajon		Battery
1223	SDG&E	ELCAJN_6_LM6K	23320	EC GEN2	13.8	0.00	1	SD-IV	San Diego, El Cajon		Market
1224	SDG&E	ELCAJN_6_UNITA1	22150	EC GEN1	13.8	0.00	1	SD-IV	San Diego, El Cajon		Market
1225	SDG&E	ELLIOT_6_ELIBT1	22216	ELLIOTT	69	0.00	29	SD-IV	San Diego		Battery
1226	SDG&E	ENERSJ_2_WIND	23100	ECO GEN1 G1	0.69	0.00	G1	SD-IV		Aug NQC	Wind
1227	SDG&E	ENERSJ_5_ESJWD2	23108	ECO_GEN1G2_6	0.72	0.00	2	SD-IV		Aug NQC	Wind
1228	SDG&E	ENERSJ_5_ESJWD2	23108	ECO_GEN1G2_6	0.72	0.00	3	SD-IV		Aug NQC	Wind
1229	SDG&E	ESCNDO_6_EB1BT1	22256	ESCNDIDO	69	0.00	10	SD-IV	San Diego		Battery
1230	SDG&E	ESCNDO_6_EB2BT2	22256	ESCNDIDO	69	0.00	11	SD-IV	San Diego		Battery
1231	SDG&E	ESCNDO_6_EB3BT3	22256	ESCNDIDO	69	0.00	12	SD-IV	San Diego		Battery
1232	SDG&E	ESCNDO_6_PL1X2	22257	ES GEN	13.8	0.00	1	SD-IV	San Diego		Market
1233	SDG&E	ESCNDO_6_UNITB1	22153	CALPK_ES	13.8	0.00	1	SD-IV	San Diego		Market
1234	SDG&E	ESCO_6_GLMQF	22333	GOALLINE	13.8	0.00	1	SD-IV	San Diego	Aug NQC	Net Seller
1235	SDG&E	ESCO_6_GLMQF	22333	GOALLINE	13.8	0.00	2	SD-IV	San Diego	Aug NQC	Net Seller
1236	SDG&E	FALBRK_6_FESBT1	23544	AV GEN1_BESS	0.64	0.00	1	SD-IV	San Diego		Battery
1237	SDG&E	GATEWY_2_GESBT1	23710	OM GEN4_BESS	0.51	0.00	1	SD-IV	San Diego		Battery
1238	SDG&E	IVSLR2_2_SM2SR1	23441	DW GEN6	0.42	0.00	1	SD-IV		Aug NQC	Solar
1239	SDG&E	IVSLRP_2_SOLAR1	23447	DW GEN2 PV	34.5	0.00	1	SD-IV		Aug NQC	Solar
1240	SDG&E	IVWEST_2_SOLAR1	23155	DU GEN1 G1	0.2	0.00	1	SD-IV		Aug NQC	Solar
1241	SDG&E	IVWEST_2_SOLAR1	23156	DU GEN1 G2	0.2	0.00	1	SD-IV		Aug NQC	Solar
1242	SDG&E	JACMSR_1_JACSR1	23352	ECO GEN2	0.55	0.00	1	SD-IV		Aug NQC	Solar
1243	SDG&E	KEARNY_6_NESBT1	22372	KEARNY	60	0.00	25	SD-IV	San Diego	Aug NQC	Battery
1244	SDG&E	KEARNY_6_SESBT2	22372	KEARNY	60	0.00	26	SD-IV	San Diego	Aug NQC	Battery
1245	SDG&E	KYCORA_6_KMSBT1				0.00		SD-IV	San Diego	Not modeled Energy Only	Battery
1246	SDG&E	LARKSP_6_UNIT 1	22074	LRKSPBD1	13.8	0.00	1	SD-IV	San Diego, Border		Market
1247	SDG&E	LARKSP_6_UNIT 2	22075	LRKSPBD2	13.8	0.00	1	SD-IV	San Diego, Border		Market
1248	SDG&E	LAROA2_2_UNITA1	22997	INTBCT	16	0.00	1	SD-IV			Market
1249	SDG&E	LAROA2_2_UNITA1	22996	INTBST	18	0.00	1	SD-IV			Market
1250	SDG&E	LECONT_2_LESBT1	23597	DW GEN8_BESS	0.69	0.00	1	SD-IV		PCDS	Battery
1251	SDG&E	LILIAC_6_SOLAR	22404	LILIAC	69	0.00	67	SD-IV	San Diego		Solar
1252	SDG&E	MELRSE_6_MELBT1	22440	MELROSE	69	0.00	22	SD-IV	San Diego		Battery
1253	SDG&E	MELRSE_6_MELBT2	22440	MELROSE	69	0.00	23	SD-IV	San Diego		Battery
1254	SDG&E	MRGT_6_MEF2	22487	MEF MR2	13.8	0.00	1	SD-IV	San Diego		Market
1255	SDG&E	MRGT_6_MMAREF	22486	MEF MR1	13.8	0.00	1	SD-IV	San Diego		Market

Attachment A - List of physical resources accounted for in the 2027 and 2031 Local Capacity Technical Studies
Physical Res. 2031 LCR

1256	SDG&E	MRGT_6_TGEBT1	23412	MRGT GEN	0.64	0.00	1	SD-IV	San Diego		Battery
1257	SDG&E	MSHGTS_6_MMARLF	22448	MESAHGTS	69	0.00	1	SD-IV	San Diego	Aug NQC	Market
1258	SDG&E	MSSION_2_QF	22496	MISSION	69	0.00	1	SD-IV	San Diego	Aug NQC	Market
1259	SDG&E	MURRAY_6_UNIT				0.00		SD-IV	San Diego	Not modeled Energy Only	Market
1260	SDG&E	OCTILO_5_WIND	23314	OCO GEN G1	0.69	0.00	1	SD-IV		Aug NQC	Wind
1261	SDG&E	OCTILO_5_WIND	23318	OCO GEN G2	0.69	0.00	1	SD-IV		Aug NQC	Wind
1262	SDG&E	OGROVE_6_PL1X2	22628	PA GEN1	13.8	0.00	1	SD-IV	San Diego		Market
1263	SDG&E	OGROVE_6_PL1X2	22629	PA GEN2	13.8	0.00	1	SD-IV	San Diego		Market
1264	SDG&E	OTAY_6_PL1X2	22617	OY GEN	13.8	0.00	1	SD-IV	San Diego		Market
1265	SDG&E	OTMESA_2_PL1X3	22605	OTAYMGT1	18	0.00	1	SD-IV	San Diego		Market
1266	SDG&E	OTMESA_2_PL1X3	22606	OTAYMGT2	18	0.00	1	SD-IV	San Diego		Market
1267	SDG&E	OTMESA_2_PL1X3	22607	OTAYMST1	16	0.00	1	SD-IV	San Diego		Market
1268	SDG&E	PALA_6_PGCBT1	22624	PALA	69	0.00	88	SD-IV	San Diego	Waiting TPD allocation	Battery
1269	SDG&E	PALOMR_2_PL1X3	22262	PEN_CT1	18	0.00	1	SD-IV	San Diego		Market
1270	SDG&E	PALOMR_2_PL1X3	22263	PEN_CT2	18	0.00	1	SD-IV	San Diego		Market
1271	SDG&E	PALOMR_2_PL1X3	22265	PEN_ST	18	0.00	1	SD-IV	San Diego		Market
1272	SDG&E	PARDSE_6_PESBT1	22636	PARADISE	69	0.00	30	SD-IV	San Diego		Battery
1273	SDG&E	PERGRN_2_PRSBT1	23933	SG GEN 1	0.48	0.00	1	SD-IV	San Diego		Battery
1274	SDG&E	PIOPIC_2_CTG1	23162	PIO PICO CT1	13.8	0.00	1	SD-IV	San Diego		Market
1275	SDG&E	PIOPIC_2_CTG2	23163	PIO PICO CT2	13.8	0.00	1	SD-IV	San Diego		Market
1276	SDG&E	PIOPIC_2_CTG3	23164	PIO PICO CT3	13.8	0.00	1	SD-IV	San Diego		Market
1277	SDG&E	POME_6_POMBT1	23929	POM_ES	0.48	0.00	1	SD-IV	San Diego		Battery
1278	SDG&E	PRCTVY_1_MIGBT1	22672	PRCTRVLY	138	0.00	4	SD-IV	San Diego	Aug NQC	Battery
1279	SDG&E	SLRMS3_2_SRMSR1	23448	DW GEN4 G2	34.5	0.00	3	SD-IV		Aug NQC	Solar
1280	SDG&E	SLRMS3_2_SRMSR1	23456	DW GEN4 G1	34.5	0.00	4	SD-IV		Aug NQC	Solar
1281	SDG&E	SMRCOS_6_LNDFIL	22724	SANMRCOS	69	0.00	1	SD-IV	San Diego	Aug NQC	Market
1282	SDG&E	TERMEX_2_PL1X3	22982	IV GEN1 CTG2	18	0.00	1	SD-IV			Market
1283	SDG&E	TERMEX_2_PL1X3	22983	IV GEN1 CTG3	18	0.00	1	SD-IV			Market
1284	SDG&E	TERMEX_2_PL1X3	22981	IV GEN1 STG	21	0.00	1	SD-IV			Market
1285	SDG&E	TULEWD_1_TULWD1	22949	BUE GEN 1_G4	0.69	0.00	1	SD-IV		Aug NQC	Wind
1286	SDG&E	TULEWD_1_TULWD1	22942	BUE GEN 1_G1	0.69	0.00		SD-IV		Not modeled Aug NQC	Wind
1287	SDG&E	TULEWD_1_TULWD1	22945	BUE GEN 1_G2	0.69	0.00		SD-IV		Not modeled Aug NQC	Wind

1288	SDG&E	TULEWD_1_TULWD1	22947	BUE GEN 1_G3	0.69	0.00		SD-IV		Not modeled Aug NQC	Wind
1289	SDG&E	VLCNTR_6_VCEBT1	23627	VC GEN1_GEN1	34.5	0.00	1	SD-IV	San Diego		Battery
1290	SDG&E	VLCNTR_6_VCEBT1	22991	VC GEN1_GEN3	34.5	0.00	1	SD-IV	San Diego		Battery
1291	SDG&E	VLCNTR_6_VCEBT2	23628	VC GEN1_GEN2	34.5	0.00	1	SD-IV	San Diego		Battery
1292	SDG&E	VLCNTR_6_VCSLR	22870	VALCNTR	69	0.00	59	SD-IV	San Diego	Aug NQC	Solar
1293	SDG&E	VLCNTR_6_VCSLR1	22870	VALCNTR	69	0.00	28	SD-IV	San Diego	Aug NQC	Solar
1294	SDG&E	VLCNTR_6_VCSLR2	22870	VALCNTR	69	0.00	28	SD-IV	San Diego	Aug NQC	Solar
1295	SDG&E	VSTAES_6_VESBT1	23541	ME GEN 1_BS1	0.64	0.00	1	SD-IV	San Diego		Battery
1296	SDG&E	VSTAES_6_VESBT1	23216	ME GEN 1_BS2	0.48	0.00	1	SD-IV	San Diego		Battery
1297	SDG&E	WESCAN_2_BDSBT1	23421	IV GEN4 G1	0.69	0.00	1	SD-IV			Battery
1298	SDG&E	WESCN2_2_BDSBT1	23425	IV GEN6 G1	0.69	0.00	1	SD-IV			Battery
1299	SDG&E	WESCN2_2_BDSBT2	23584	Q1531 G3	0.69	0.00	1	SD-IV			Battery
1300	SDG&E	WISTRA_2_WRSSR1	23287	DW GEN5 G1	0.42	0.00	1	SD-IV		Aug NQC	Solar
1301	SDG&E	ZZ_CCRITA_7_RPPCHF	22124	CHCARITA	138	2.00	1	SD-IV	San Diego		Market
1302	SDG&E	ZZ_LAKHDG_6_UNIT 1	22625	LKHODG1	13.8	0.00	1	SD-IV	San Diego	Mothballed	Market
1303	SDG&E	ZZ_LAKHDG_6_UNIT 2	22626	LKHODG2	13.8	0.00	2	SD-IV	San Diego	Mothballed	Market
1304	SDG&E	ZZ_LAROA1_2_UNITA1	20187	LRP-U1	16	0.00	1	SD-IV		Connect to CENACE/CFE grid for the summer – not available for ISO BAA RA purpose	Market
1305	SDG&E	ZZ_SAMPSN_6_KELCO1	22700	SAMPSON	69	0.00	1	SD-IV	San Diego		Market
1306	SDG&E	ZZZ_CAMERN_6_BSPBT1	22104	CAMERON	69	0.50	79	SD-IV	San Diego	No NQC - Pmax	Battery
1307	SDG&E	ZZZ_CRELMN_6_AABBT1	22152	CREELMAN	69	0.50	77	SD-IV	San Diego	No NQC - Pmax	Battery
1308	SDG&E	ZZZ_GATEWY_2_GESBT 1	23961	OM GEN4_ES2	0.63	22.00	1	SD-IV	San Diego	No NQC - Pmax	Battery
1309	SDG&E	ZZZ_GRNITE_6_ESCBT1	22336	GRANITE	69	0.00	59	SD-IV	San Diego	Energy Only	Battery
1310	SDG&E	ZZZ_MURRAY_6_ESMBT 2	22532	MURRAY	69	0.00	83	SD-IV	San Diego	Energy Only	Battery
1311	SDG&E	ZZZ_MURRAY_6_ESMBT 3	22532	MURRAY	69	0.00	86	SD-IV	San Diego	Energy Only	Battery

Attachment A - List of physical resources accounted for in the 2027 and 2031 Local Capacity Technical Studies
Physical Res. 2031 LCR

1312	SDG&E	ZZZ_MURRAY_6_ESMBT 5	22532	MURRAY	69	0.00	27	SD-IV	San Diego	Energy Only	Battery
1313	SDG&E	ZZZ_New Unit	22901	PALL_BESS	0.69	0.00	1	SD-IV	San Diego	Energy Only	Battery
1314	SDG&E	ZZZ_New Unit	23231	Q1432_PV	0.39	0.00	1	SD-IV	San Diego	Energy Only	Solar
1315	SDG&E	ZZZ_New Unit	23253	Q1432_ES	0.48	17.40	1	SD-IV	San Diego	No NQC - Pmax	Battery
1316	SDG&E	ZZZ_New Unit	23685	Q1045_GEN	0.55	50.00	1	SD-IV	San Diego	No NQC - Pmax	Battery
1317	SDG&E	ZZZ_New Unit	23560	Q1047_BESS	0.55	50.00	1	SD-IV	San Diego, El Cajon	No NQC - Pmax	Battery
1318	SDG&E	ZZZ_New Unit	22962	Q1660_62_EQG	0.72	51.90	1	SD-IV		Aug NQC	Wind
1319	SDG&E	ZZZ_New Unit	23519	Q1169_GEN2	0.66	69.60	1	SD-IV	San Diego	No NQC - Pmax	Battery
1320	SDG&E	ZZZ_New Unit	22969	Q1532_GEN	34.5	90.00	1	SD-IV		No NQC - Pmax	Hybrid
1321	SDG&E	ZZZ_New Unit	23841	Q1657_GEN	0.6	100.00	1	SD-IV	San Diego	No NQC - Pmax	Battery
1322	SDG&E	ZZZ_New Unit	23959	Q1673_ES1	0.6	300.00	1	SD-IV	San Diego	No NQC - Pmax	Battery
1323	SDG&E	ZZZ_New Unit	22963	Q1660_45_EQG	0.72	51.90	2	SD-IV		Aug NQC	Wind
1324	SDG&E	ZZZ_New Unit	23871	Q1662_ES	34.5	50.00	12	SD-IV	San Diego, El Cajon	No NQC - Pmax	Battery
1325	SDG&E	ZZZ_New Unit	22004	ALPINE	69	0.00	48	SD-IV	San Diego	Energy Only	Battery
1326	SDG&E	ZZZ_New Unit	22004	ALPINE	69	0.00	49	SD-IV	San Diego	Energy Only	Battery
1327	SDG&E	ZZZ_New Unit	22448	MESAHGTS	69	3.00	62	SD-IV	San Diego	No NQC - Pmax	Battery
1328	SDG&E	ZZZ_New Unit	22640	PENDLETN	69	0.00	64	SD-IV	San Diego	Seeking TPD alocation	Battery
1329	SDG&E	ZZZ_New Unit	22640	PENDLETN	69	0.00	65	SD-IV	San Diego	Seeking TPD alocation	Battery
1330	SDG&E	ZZZ_New Unit	22408	LOSCOCHS	69	0.00	72	SD-IV	San Diego	Energy Only	Battery
1331	SDG&E	ZZZ_New Unit	22336	GRANITE	69	0.00	73	SD-IV	San Diego	Energy Only	Battery
1332	SDG&E	ZZZ_New Unit	22336	GRANITE	69	0.00	90	SD-IV	San Diego	Energy Only	Battery
1333	SDG&E	ZZZ_OTAY_6_ECVBT1	22604	OTAY	69	3.00	90	SD-IV	San Diego	No NQC - Pmax	Battery
1334	SDG&E	ZZZ_OTAY_6_ECVBT2	22604	OTAY	69	3.00	91	SD-IV	San Diego	No NQC - Pmax	Battery
1335	SDG&E	ZZZ_SANTEE_1_SABBT1	22734	SANTEE	138	10.00	31	SD-IV	San Diego	No NQC - Pmax	Battery
1336	SDG&E	ZZZZ_New Unit	23695	Q1810_GEN1	0.65	0.00	1	SD-IV	San Diego	Energy Only	Battery
1337	SDG&E	ZZZZ_New Unit	23696	Q1810_GEN2	0.65	0.00	1	SD-IV	San Diego	Energy Only	Battery
1338	SDG&E	ZZZZ_New Unit	22091	Q1820_GEN	0.6	0.00	1	SD-IV	San Diego	Energy Only	Battery
1339	SDG&E	ZZZZ_New Unit	23718	Q2205_ES	0.66	0.00	1	SD-IV	San Diego	Waiting TPD allocation	Battery
1340	SDG&E	ZZZZ_New Unit	23996	Q2206_ES	0.66	0.00	1	SD-IV	San Diego	Waiting TPD allocation	Battery
1341	SDG&E	ZZZZ_New Unit	23713	Q2208_ES	0.66	0.00	1	SD-IV	San Diego	Waiting TPD allocation	Battery

Attachment A - List of physical resources accounted for in the 2027 and 2031 Local Capacity Technical Studies
Physical Res. 2031 LCR

1342	SDG&E	ZZZZ_New Unit	23858	Q2213_ES	34.2	0.00	1	SD-IV		Waiting TPD allocation	Battery
1343	SDG&E	ZZZZ_New Unit	23857	Q2213_PV	34.2	0.00	1	SD-IV		Waiting TPD allocation	Solar
1344	SDG&E	ZZZZ_New Unit	23789	Q2224_G	0.72	0.00	1	SD-IV		Waiting TPD allocation	Wind
1345	SDG&E	ZZZZ_New Unit	23899	Q1665_ES1_GE	0.63	24.72	1	SD-IV		No NQC - est. data	Battery
1346	SDG&E	ZZZZ_New Unit	23905	Q1665_ES2_GE	0.63	24.72	1	SD-IV		No NQC - est. data	Battery
1347	SDG&E	ZZZZ_New Unit	23912	Q1665_ES3_GE	0.63	24.72	1	SD-IV		No NQC - est. data	Battery
1348	SDG&E	ZZZZ_New Unit	23954	Q2173_GEN	0.69	200.00	1	SD-IV		No NQC - Pmax	Battery
1349	SDG&E	ZZZZ_New Unit	23042	Q1806_GEN	0.66	250.00	1	SD-IV	San Diego	No NQC - Pmax	Battery
1350	SDG&E	ZZZZ_New Unit	23234	Q1429	0.65	0.00	10	SD-IV		Energy Only	Wind
1351	SDG&E	ZZZZ_New Unit	23557	Q1048_BESS	0.55	33.00	C7	SD-IV	San Diego	No NQC - Pmax	Battery

ATTACHMENT C

Notice of Availability

BEFORE THE PUBLIC UTILITES COMMISSION
OF THE STATE OF CALIFORNIA

Order Instituting Rulemaking to Oversee the Resource Adequacy Program, Consider Program Reforms and Refinements, and Establish Forward Resource Adequacy Procurement Obligations.	Rulemaking 25-10-003

CALIFORNIA INDEPENDENT SYSTEM OPERATOR CORPORATION
NOTICE OF AVAILABILITY OF
FINAL 2027 LOCAL CAPACITY TECHNICAL REPORT
AND UPDATE REGARDING 2027 FLEXIBLE CAPACITY NEEDS ASSESSMENT

Pursuant to the December 12, 2025 *Assigned Commissioner's Scoping Memo and Ruling* (Scoping Memo) and the April 3, 2026 *Administrative Law Judge's Ruling Modifying Track 1 Schedule For Local Capacity Requirement Issues* (Modified Schedule), the California Independent System Operator Corporation (CAISO) hereby provides notice to the service list for California Public Utilities Commission (Commission) Rulemaking 25-10-003 that the CAISO's Final 2027 Local Capacity Technical Report is posted publicly on the CAISO's website. The Final 2027 Local Capacity Technical Report is available at the following address: https://stakeholdercenter.caiso.com/InitiativeDocuments/Final-2027-Local-Capacity-Technical-Report.pdf

The study also includes a List of Physical Resources accounted for in the 2027 and 2031 Local Capacity Technical Studies in Excel (.xlsx) format, available at the following address: https://stakeholdercenter.caiso.com/InitiativeDocuments/AttachmentA-List-of-Physical-Resources-Accounted-for-in-the-2027-and-2031-Local-Capacity-Technical-Studies.xlsx

As part of its annual Local Capacity Technical Study process, the CAISO provides an opportunity for stakeholders to comment on its draft Local Capacity Requirements (LCR) results prior to publishing the Final Local Capacity Technical Study. The CAISO responds to each stakeholder comment through its LCR process. The CAISO did not receive any comments on the draft LCR results. The Commission provided parties an opportunity to file comments on the

draft LCR results in this proceeding. Parties submitted one set of comments that did not suggest any revisions to the draft LCR results.[1]

The CAISO also provides an update on its 2027 Flexible Capacity Needs Assessment and 2027 Availability Assessment Hours. The Scoping Memo and Modified Schedule request the CAISO file final 2027 flexible resource adequacy requirements in this proceeding in early-May. The CAISO published its draft 2027 Flexible Capacity Needs Assessment on March 31, 2026 and held a stakeholder meeting on April 2, 2026.[2] The CAISO received no stakeholder comments on the draft report and draft assessment hours, which were due on April 16, 2026. The CAISO plans to finalize the 2027 Flexible Capacity Needs Assessment as soon as practicable. The CAISO is targeting a filing date of May 15, 2026.

Respectfully submitted,

By: *<u>/s/ Marissa Mercado</u>*
Roger E. Collanton
General Counsel
William H. Weaver
Assistant General Counsel
Marissa Mercado
Counsel
California Independent System
Operator Corporation
250 Outcropping Way
Folsom, CA 95630
Tel: 916-963-0521
Fax: 916-608-7222
Email: mmercado@caiso.com

Dated: May 1, 2026

[1] *See* Sierra Club and California Environmental Justice Alliance Comments on the CAISO's Draft 2027 Local Capacity Technical Report.

[2] *See* CAISO Flexible Capacity Needs Assessment – 2026 stakeholder page: https://stakeholdercenter.caiso.com/RecurringStakeholderProcesses/Flexible-capacity-needs-assessment-2027